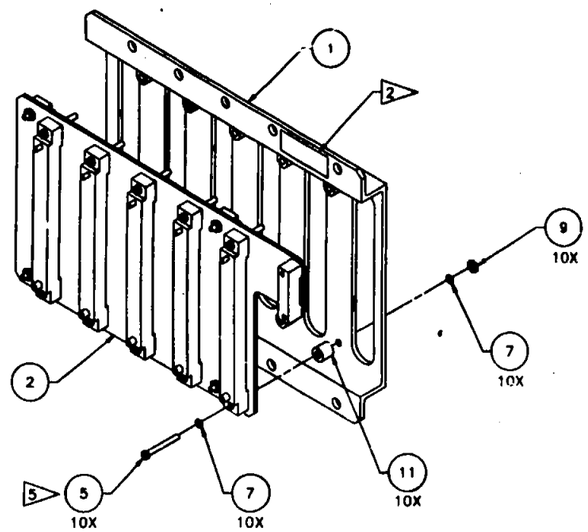

-301

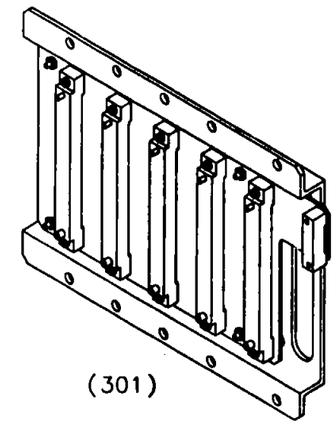

(301)

AR	73X, BLACK	INK, MARKING		1	14
AR	222	ADHESIVE	LOCTITE	4	13
					12
10	SS-3802-256-12	STANDOFF, THREADED	CRES .086-56UNC-3B	3	11
					10
10	MS35649-224	NUT, NON-LOCKING	CRES .086-56UNC-3B		9
					8
20	NAS620C2	WASHER, FLAT	CRES NO. 2 NOMINAL		7
					6
10	NAS1101E02-12	SCREW, FIL HD	CRES A286 .086-56UNJC-3A X .75L		5
					4
					3
1	SEG46114415-301	PWBA, BACKPLANE			2
1	SDG46114691-001	BRACKET, BACKPLANE			1
-	-301	BACKPLATE ASSY			
-301 PART NUMBER		DESCRIPTION	MATERIAL	SPECIFICATION	ITEM

5 APPLY ONE DROP OF ADHESIVE (ITEM 13) TO SCREW THREADS PER JSCM 8080 MP/10.

4 LOCTITE CORP, NEWINGTON, CT.

3 GLOBE ELECTRONICS HARDWARE, INC, WOODSIDE, NY.

2 PERMANENT INK MARK PN IN .12 HIGH CHARACTERS WITH 73X (BLACK) MARKING INK PER JSC-SPEC-M-1, PARA 3.7.8.

1 INDEPENDENT INK INC, GARDENA, CA.

NOTES:

7. ALL REFERENCED SPECIFICATIONS AND STANDARDS SHALL BE OF THE LATEST REVISION LEVEL OR AS SPECIFIED IN THE PROCUREMENT DOCUMENT. IN THE CASE OF CONFLICT, THE PROCUREMENT DOCUMENT SHALL TAKE PRECEDENCE.
6. TORQUE FASTENERS AS FOLLOWS: (NO. 2) 18-19 INCH OUNCES ABOVE RUNNING TORQUE.
5. CLEANLINESS REQUIREMENTS PER SN-C-0005 LEVEL GC.
4. THIS ASSEMBLY CONTAINS NO FRACTURE CRITICAL ELEMENTS.
3. ALL DIMENSIONS ARE IN INCHES.
2. FABRICATION TOLERANCES AND PRACTICES PER SKZ36103755.
1. INTERPRET PER JSCM 8500.

NOTES: UNLESS OTHERWISE SPECIFIED.

DIMENSIONAL TOLERANCE UNLESS NOTED OTHERWISE .0 ± .1 .00 ± .03 .000 ± .010 ANGULAR ±

SURFACE FINISH IN MICROINCHES RMS UNLESS NOTED OTHERWISE

NEXT ASSY SEG46114187

SIGNATURES	DATE
DR FREDERICKSEN	10/28/96
ENG	9/11/97
CH	9/8/97
	9/25/97
QE	9/29/97
MATL	9/19/97
STRESS	9/16/97
AUTH	9/19/97

NATIONAL AERONAUTICS & SPACE ADMINISTRATION
LYNDON B. JOHNSON SPACE CENTER HOUSTON, TEXAS

BACKPLATE ASSY, SCSI LIME-HRF

CODE IDENT NO. 21356 | SIZE D | DWG NO. SEG46114891

SCALE 1/1 | EA5 PROJECT: J104 | SHEET 1 OF 1

CALC WT:

PROJECT: J104-HRF
LIBRARY: LIME
DRW FILE: 46114891.dwg

EQUIP TYPE
☒ FLT HDWR
☐ OTHER (SPECIFY)
☐ APPLICABLE GSE

077