3	11	3. PART NO. [illegible]	
	AR	4. FLA [illegible]	
	19	5. ADDED FLAG NOTE [illegible] ADD ITEM	
	18	4. REWORDED FLAG NOTE [illegible]	
	08 09 18 16	5. ADDED FLAG NOTE [illegible]	

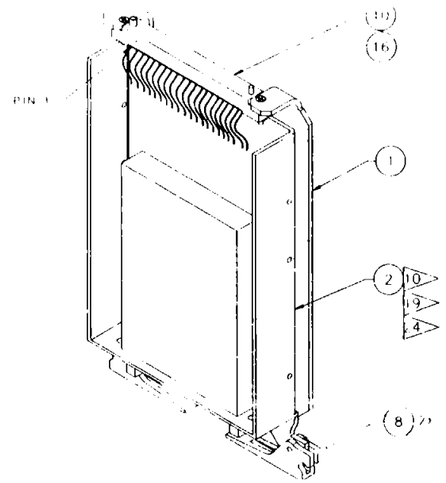

301 AND 302

13

25 STAKE COMPONENTS WITH 3145, ITEM 17

24 PRIME PER NHB 5300.4 (3J) PARA 3J402 USING 1204 PRIMER (ITEM 18) PRIOR TO CONFORMAL COATING.

23 PARKS CORP, SOMERSET, MA

22 REMOVE ITEM 19 PRIOR TO CONFORMAL COATING. MASK OFF SOCKET PINS, APPLY CONFORMAL COATING TO BOARD AREA UNDER THE EPROM AND REPLACE EPROM AND STAKE USING ITEM 17

21 FOR 302 CONFIGURATION ONLY. REMOVE TERMINATION RESISTOR

20 NEATLY COVER/WRAP WITH TAPE (ITEM 21) TO PROTECT FROM CONFORMAL COATING (ITEM 1). TERMINATOR MARKINGS SHOULD BE FACING OUTWARDS FRONT OF DEVICE.

19 STAKE [illegible] SW [illegible] TO CIRCUIT BOARD AND HOUSING USING ADHESIVE (ITEM 17)

18 [illegible] WITH EPROM (ITEM [illegible]

17 [illegible] CLOSED EDGES AS PER MIL [illegible] 5541, CLA[illegible]

16 MARK PN [illegible] .125 HIGH CHARACTERS WITH [illegible] BLACK INK (ITEM 14) PER JSC-SPEC-MI [illegible] AS SHOWN

15 C & [illegible] COMPONENTS [illegible] NEWTON, MA

[illegible] ALL SWITCHES [illegible] OFF POSITION.

[illegible] ALL WIRES SHALL BE CONTAINED WITHIN THE CHASSIS ENVELOPE

[illegible] STAKE WIRES [illegible] RTV 3145 (ITEM 17) AFTER PIN TO PIN VERIFICATION

[illegible] PER

10 ALTER ITEM 2 AS FOLLOWS
REMOVE [illegible]
MOUNT [illegible]
MACHINE [illegible] PER VIEW A [illegible] SHEET
DESOLDER, REMOVE AND DISCARD CONNECTORS 13 AND 16
[illegible] CONNECTOR (ITEM 10) PER WIRE LIST,
AND ATTACH CONNECTOR (ITEM 10) PER WIRE LIST.
[illegible] DISCARD AND REPLACE WITH NORMAL [illegible]
(ITEM [illegible] WITH 2704 NAPHTHA [illegible]) TO REMOVE [illegible]
[illegible] PRINTED WIRING BOARD 303-301 [illegible] PER NHB 5300.4 [illegible]
[illegible] 301 [illegible] NORMAL CONFORMAL COATING (ITEM 1). [illegible] MIL HARDWARE
REASSEMBLE [illegible] FRONT BEZEL [illegible] CUT BOARD AND CHASSIS WITH
EXISTING SPARE HARDWARE.
REMOVE JUMPER PIN BLOCK AND DISCARD.
[illegible] DIP SW [illegible] OF PACK (ITEM 20) AND SOLDER (ITEM 19)

[illegible] GARDENA, CA

[illegible] ADD THREADS [illegible] (ITEM 22) PER JSCM 8080 MAP [illegible]

[illegible] LOCATE [illegible] NEWINGTON, CT

[illegible] AMPHENOL [illegible] FAIR, MN.

[illegible] DOW CORNING CORP. MIDLAND, MI

[illegible] ATTACHED [illegible]

[illegible] MAP [illegible] CAMARILLO, CA

[illegible] MN

[illegible] THOMAS DATWILER, SWITZERLAND

7. SOLDER PER NAS5300.4(3A-2).
6. APPLY TORQUE OF 3-4 INCH POUNDS TO SLOTTED 2 AND M3 FASTENERS ABOVE RUNNING TORQUE.
5. CLEANLINESS REQUIREMENTS PER SN-[illegible] 0005 [illegible]
4. [illegible] ASSEMBLY CONTAINS NO FRACTURE CRITICAL ITEMS.
3. ALL DIMENSIONS ARE IN INCHES.
2. FABRICATION TOLERANCES AND PRACTICES PER [illegible] 3755.
1. INTERPRET PER JSCM 8500.
NOTE: UNLESS OTHERWISE SPECIFIED.

ALTERED ITEM DRAWING

AR		5419	TAPE	POLYIMIDE [illegible]	6	21
1	1	[illegible] AV	8 POSITION DIP SWITCH		15	20
1	1	[illegible]	EPROM	V3.5	1	19
AR	AR	1204	PRIMER		5	18
AR	AR	3145	ADHESIVE	[illegible]	5	17
AR	AR	M2 [illegible] 002-[illegible]	SHRINK [illegible]	[illegible]	[illegible]	[illegible]
AR	AR	63-37 025P3REEL15	SOLDER		[illegible]	[illegible]
AR	AR	73[illegible]	INK, MARKING	BLACK	[illegible]	14
AR	AR	2[illegible]	THINNER, NAPTHA			[illegible]
AR	AR	222	THREADLOCKING ADHESIVE/SEALANT	LOW [illegible] TYPE [illegible]		[illegible]
AR	AR	3140	CONFORMAL COATING			1
1	1	WGV30PCS[illegible]	CONNECTOR			[illegible]
104 IN	104 IN	MC[illegible]/29/22 24 9	WIRE 24 AWG	[illegible]		
[illegible]	[illegible]	102-[illegible]-3-B[illegible]	INSERTER-EXTRACTOR	[illegible]		
2	2	TL 2704-166	WASHER, FLAT	[illegible]		
[illegible]		NA[illegible]10C2M	NUT, SELF LOCK REDUCED HEX			
2	2	NA[illegible]6203 2	WASHER, FLAT REDUCED OD	[illegible]		
2	2	NAS110[illegible]102 8	SCREW, MACH FLH 100° CSK	[illegible]		4
4	4	NA0070 030006	SCREW, MACH FLH 100° CSK	[illegible]		3
1	1	[illegible]	PCMCIA CARD READER/WRITER	MAFF FROM [illegible]		2
1	1	[illegible]	GUIDE, DCSC DEVICE			1
		302	PCMCIA CARD READER/WRITER ASSY			
		301	PCMCIA CARD READER/WRITER ASSY			
SH	SH	PART NUMBER	DESCRIPTION	MATERIAL	[illegible]	ITEM

DIMENSIONAL TOLERANCE [illegible]	SIGNATURES	DATE
[illegible]	[illegible]	[illegible]
[illegible]	[illegible]	[illegible]
[illegible]	[illegible]	[illegible]
[illegible]	[illegible]	[illegible]
[illegible]	[illegible]	[illegible]
[illegible]	[illegible]	[illegible]
[illegible]	[illegible]	[illegible]

NEXT HIGHER ASSY [illegible]

[illegible] ASSEMBLY [illegible] ITEM, SAWTEL

21356 D [illegible] A

526

FUNCTION	FROM	PIN	TO	PIN	LENGTH	WIRE
+5VDC	P1	1	J6	3	4.0"	M22759/22-24-9
SCZDB0	P1	2	J3	2	2.0"	
GND	P1	3	J3	1	2.0"	
SCZDB1	P1	4	J3	4	2.0"	
GND	P1	5	J3	3	2.0"	
SCZDB2	P1	6	J3	6	2.0"	
GND	P1	7	J3	5	2.0"	
SCZDB3	P1	8	J3	8	2.0"	
GND	P1	9	J3	7	2.0"	
SCZDB4	P1	10	J3	10	2.0"	
GND	P1	11	J3	9	2.0"	
SCZDB5	P1	12	J3	12	2.0"	
SCZDB6	P1	13	J3	14	2.0"	
-5VDC	P1	14		NC		
+12VDC	P1	15	J6	1	4.0"	
SCZDB7	P1	16	J3	16	2.0"	
GND	P1	17	J3	11	2.0"	
SCZDBP	P1	18	J3	13	2.0"	
GND	P1	19	J6	2	4.0"	
GND	P1	20	J6	3	4.0"	
GND	P1	21	J3	13	2.0"	
GND	P1	22	J3	15	2.0"	
GND	P1	23	J3	17	2.0"	
GND	P1	24	J3	19	2.0"	
NC	P1	25		NC		
TERMPWR	P1	26	J3	26	2.0"	
12VDC	P1	27		NC		
+5VDC	P1	28		NC		
GND	P1	29	J3	21	2.0"	
GND	P1	30	J3	23	2.0"	
GND	P1	31	J3	25	2.0"	
SCZATN	P1	32	J3	[illegible]	2.0"	
GND	P1	33	J3	27	2.0"	
GND	P1	34	J3	29	2.0"	
GND	P1	35	J3	31	2.0"	
SCZBSY	P1	36	J3	36	2.0"	
GND	P1	37	J3	35	2.0"	
SCZACK	P1	38	J3	38	2.0"	
SCZRST	P1	39	J3	40	2.0"	
+5VDC	P1	40		NC		
+12VDC	P1	41		NC		
SCZMSG	P1	42	J3	42	2.0"	
GND	P1	43	J3	43	2.0"	
SCZCD	P1	44	J3	44	2.0"	
GND	P1	45	J3	45	2.0"	
SCZREQ	P1	46	J3	46	2.0"	
GND	P1	47	J3	47	2.0"	
SCZPEQ	P1	48	J3	48	2.0"	
NC	P1	49		NC		M22759/22-24-9

FUNCTION	FROM	PIN	TO	PIN	LENGTH	WIRE
SCZIO	P1	50	J3	50	2.0"	M22759/22-24-9
GND	P1	51	J3	45	2.0"	M22759/22-24-9
GND	P1	52	J3	47	2.0"	M22759/22-24-9
12VDC	P1	53	J3	NC		
+5VDC	P1	54	J3	NC		
GND	P1	55	J3	49	4.0"	M22759/22-24-9
GND	P1	56	J3	NC		
GND	P1	57	J3	NC		
GND	P1	58	J3	NC		
GND	P1	59	J3	NC		
GND	P1	60	J3	NC		
GND	P1	61	J3	NC		
GND	P1	62	J3	NC		
GND	P1	63	J3	NC		
GND	P1	64	J3	NC		
GND	P1	65	J3	NC		
GND	P1	66	J3	43	2.0"	
-5VDC	P1	67		NC		
+12VDC	P1	68		NC		
NC	P1	69		NC		
NC	P1	70		NC		
NC	P1	71		NC		
NC	P1	72		NC		
NC	P1	73		NC		
NC	P1	74		NC		
NC	P1	75		NC		
NC	P1	76		NC		
NC	P1	77		NC		
NC	P1	78		NC		
NC	P1	79		NC		
12VDC	P1	80		NC		

A PENZA

21356 D

527

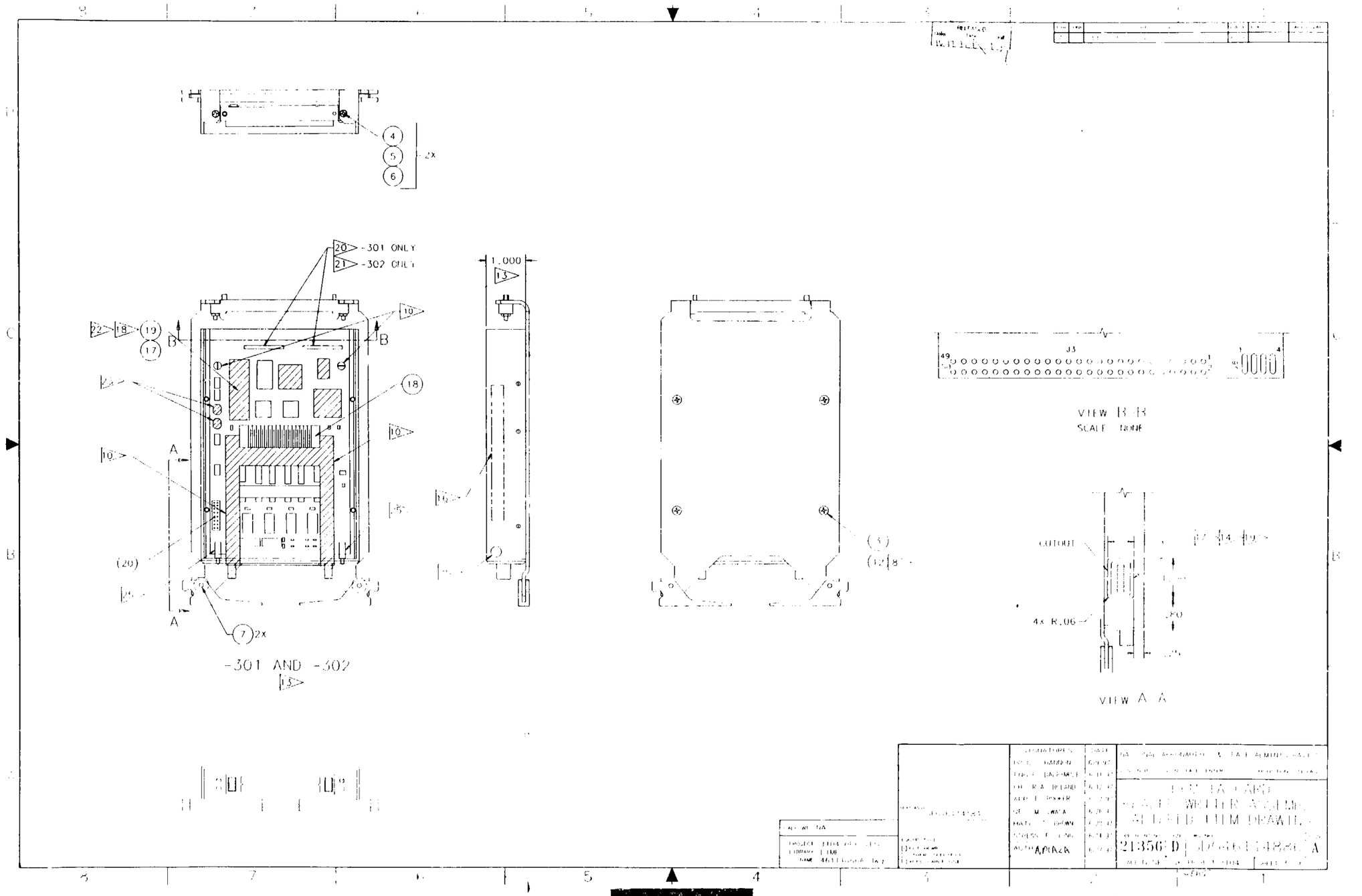

-301 ONLY
-302 ONLY
1.000
-301 AND -302
VIEW B-B
SCALE NONE
CUTOUT
4x R.06
VIEW A-A

528