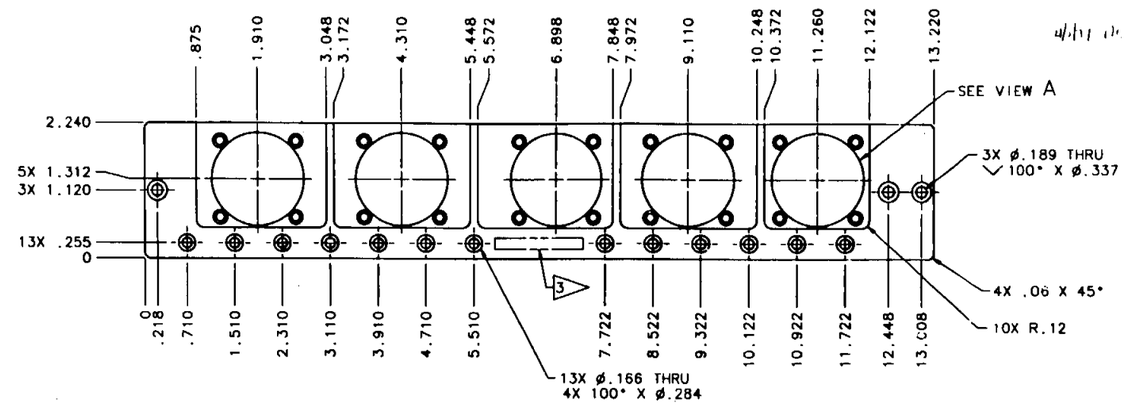

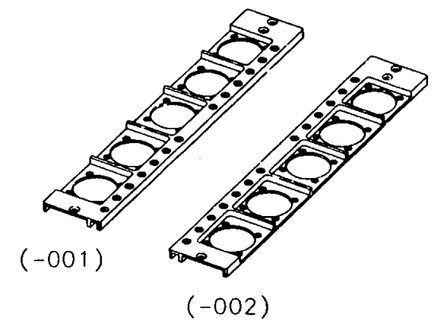

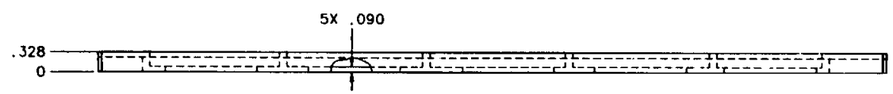

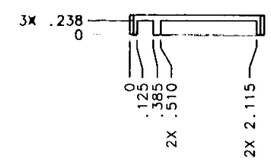

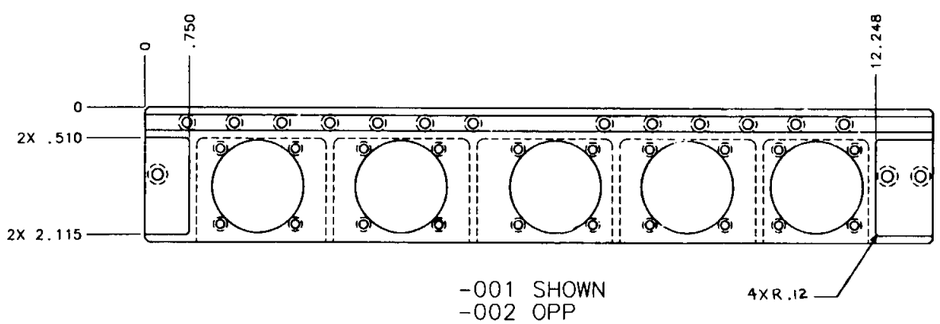

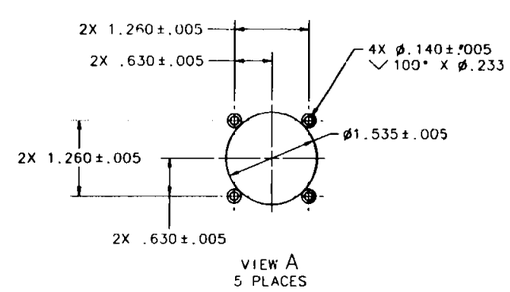

QTY	PART NUMBER	DESCRIPTION	MATERIAL	SPECIFICATION	NOTES
AR	73X, BLACK	INK, MARKING			2
-	-002	CROSSMEMBER, OPP	7075-T7351 AL ALY 13.3 X 2.3 X .40	QQ-A-250/12	1
-	-001	CROSSMEMBER	7075-T7351 AL ALY 13.3 X 2.3 X .40	QQ-A-250/12	1

3 PERMANENT INK MARK PN IN .12 HIGH CHARACTERS WITH 73X (BLACK) MARKING INK PER JSC-SPEC-M-1, PARA 3.7.8.

2 INDEPENDENT INK INC, GARDENA, CA.

1 APPLY CHEM FILM PER MIL-C-5541, CLASS 3.

NOTES:

5. CLEANLINESS REQUIREMENTS PER SN-C-0005 LEVEL GC.
4. THIS ITEM CONTAINS NO FRACTURE CRITICAL ELEMENTS.
3. ALL DIMENSIONS ARE IN INCHES.
2. FABRICATION TOLERANCES AND PRACTICES PER SKZ36103753.
1. INTERPRET PER JSCM 8500.

NOTES: UNLESS OTHERWISE SPECIFIED.

DIMENSIONAL TOLERANCE UNLESS NOTED OTHERWISE .0 ± .1 .000 ± .010 .00 ± .03 ANGULAR ± 1°

SURFACE FINISH IN MICROINCHES RMS UNLESS NOTED OTHERWISE 125/

NEXT ASSY SEG46114863

CALC WT

PROJECT: J104-HRF
LIBRARY: HRF CIRCUIT BD
DRW FILE: 46114861.dwg

EQUIP TYPE
☒ FLT HDWR
☐ OTHER (SPECIFY)
☐ APPLICABLE GSE

SIGNATURES	DATE
DR FREDERICKSEN	9/23/96
ENG	3/25/97
CH	4/10/97
APP	
QE	4/11/97
MATL	3/24/97
STRESS	3/26/97
AUTH	4/1/97

NATIONAL AERONAUTICS & SPACE ADMINISTRATION
LYNDON B. JOHNSON SPACE CENTER HOUSTON, TEXAS

CROSSMEMBER, CARD CAGE - HRF

CODE IDENT NO. 21356 | SIZE D | DWG NO. SDG46114861
SCALE 1/1 | EAS PROJECT: J104 | SHEET 1 OF 1

122087			DRAWING CHANGE NOTICE					SHEET 1 OF 1
DRAWING NO. SDG46114861	REV NC	SEQ #	REASON FOR CHANGE	ORIGINATOR L. LEARD	DATE 97/08/19	QE [illegible]	DATE 9/16/97	
DRAWING TITLE CROSSMEMBER. CARD CAGE - HRF			LOCATE DRILLED HOLES AND CALLOUT DIAMETER DIMENSION.	ENG [illegible]	9/5/97	MATL [illegible]	9/10/97	
				CH [illegible]	8/28/97	STRESS [illegible]	9/9/97	
PROJECT J104-HRF-VEG				APP [illegible]	9/23/97			
				AUTH [illegible]	9/24/97			

Init 9-30-97 NC PM

ZONE

WAS:

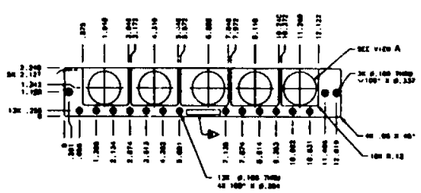

IS:

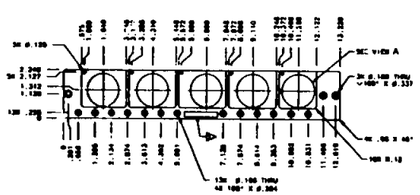

QTY	PART NUMBER	DESCRIPTION	MATERIAL	SPECIFICATION	ITEM	(IS)(WAS)

DWG FILE: 122087-DCN PROJECT: J104-HRF LIBRARY:HRF CIRCUIT BD

471