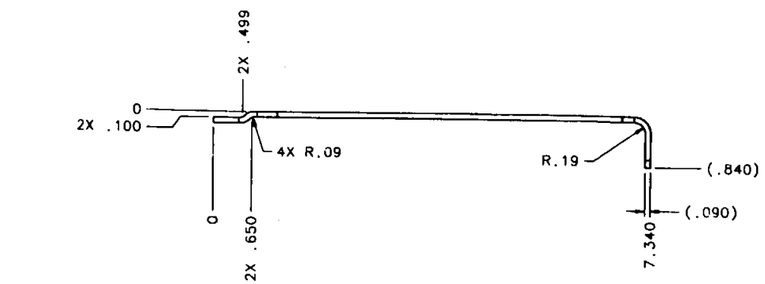

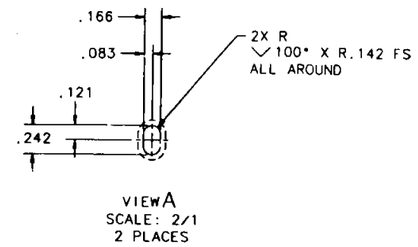

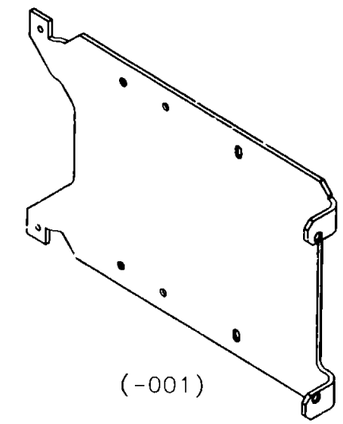

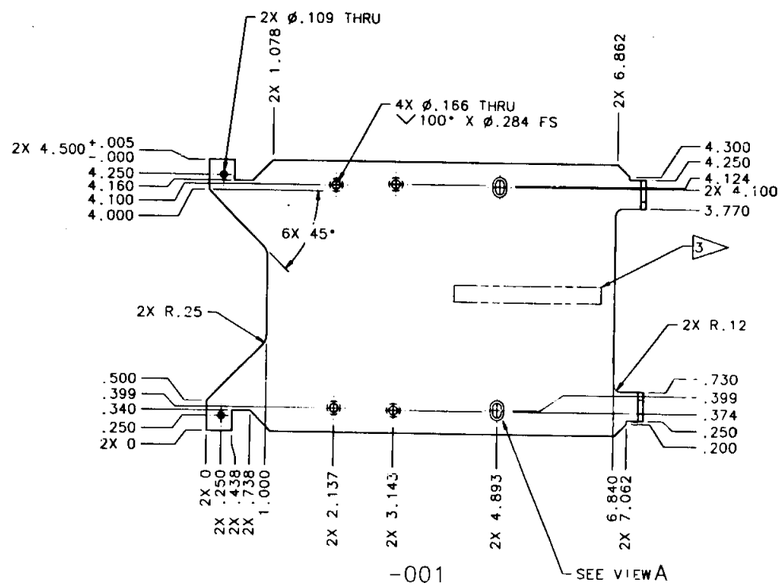

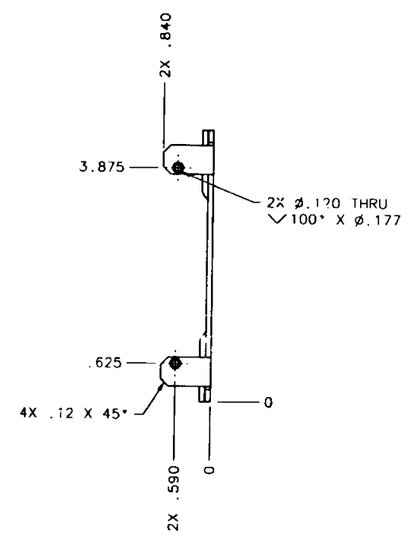

3 PERMANENT INK MARK PN IN .12 HIGH CHARACTERS WITH 73X (BLACK) MARKING INK PER JSC-SPEC-M-1, PARA 3.7.8.

2 INDEPENDENT INK INC. GARDENA, CA.

1 APPLY TUFRAM COATING USING TUFRAM L-4. AMERICAN MAGNAPLATE TEXAS, INC, ARLINGTON, TX.

NOTES:

5. CLEANLINESS REQUIREMENTS PER SN-C-0005, LEVEL GC.
4. THIS ITEM CONTAINS NO FRACTURE CRITICAL ELEMENTS.
3. ALL DIMENSIONS ARE IN INCHES.
2. FABRICATION TOLERANCES AND PRACTICES PER SKZ36103755.
1. INTERPRET PER JSCM 8300. NOTES: UNLESS OTHERWISE SPECIFIED.

QTY	PART NUMBER	DESCRIPTION	MATERIAL	SPECIFICATION	NOTES
AR	73X, BLACK	INK, MARKING			2
-	-001	SLIDE	6061-T6 AL ALY 8.3 X 4.6 X .09 SH	QQ-A-250/11	1

DIMENSIONAL TOLERANCE UNLESS NOTED OTHERWISE .0 ± .1 .000 ± .010 .00 ± .03 ANGULAR ± 1°

SURFACE FINISH IN MICROINCHES RMS UNLESS NOTED OTHERWISE ---

NEXT ASSY SEG46114887 SEG46114888

SIGNATURES	DATE
DR FREDERICKSEN	8/1/96
ENG	4/4/97
CH	4/10/97
APP	4-10-97
QE	4/14/97
MATL	4/1/97
STRESS	4/5/97
AUTH	4/14/97

NATIONAL AERONAUTICS & SPACE ADMINISTRATION
LYNDON B. JOHNSON SPACE CENTER HOUSTON, TEXAS

SLIDE, PCMCIA/ SCSI DEVICE-HRF

CODE IDENT NO. 21356 | SIZE D | DWG NO. SDG46114692

SCALE 1/1 | EAS PROJECT: J104 | SHEET 1 OF 1

CALC WT:

PROJECT: J104-HRF
LIBRARY: LIME
DRW FILE: 46114692.dwg

EQUIP TYPE
☒ FLT HDWR
☐ OTHER (SPECIFY)
☐ APPLICABLE GSE

094