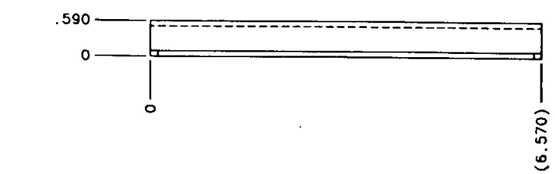

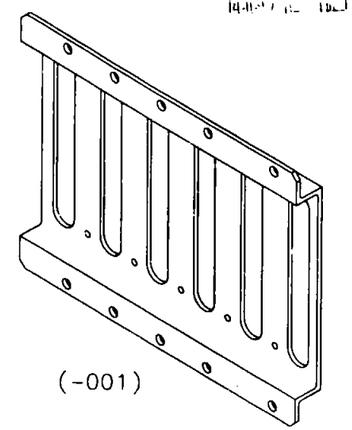

(-001)

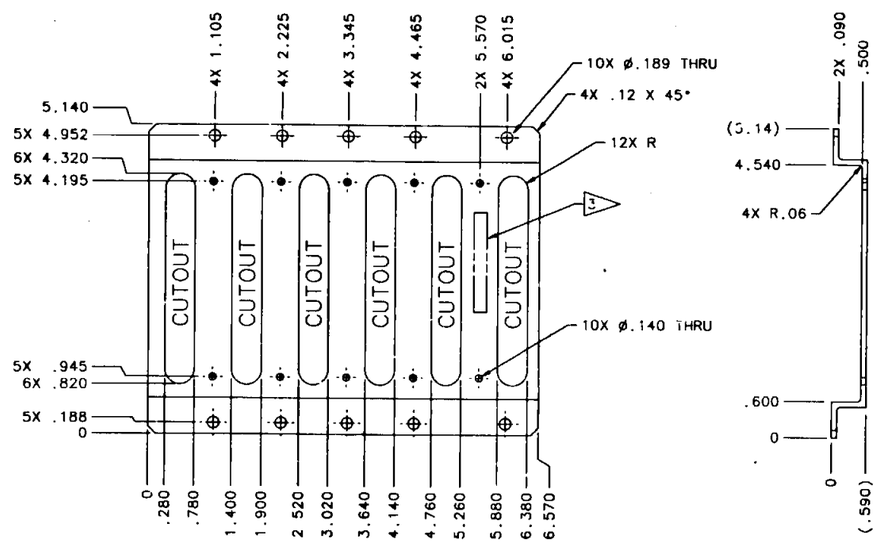

-001

3 PERMANENT INK MARK PN IN .12 HIGH CHARACTERS WITH 73X (BLACK) MARKING INK PER JSC-SPEC-M-1, PARA 3.7.8.

2 INDEPENDENT INK INC. GARDENA, CA.

1 APPLY CHEMICAL FILM PER MIL-C-5541, CLASS 3.

NOTES:

5. CLEANLINESS REQUIREMENTS PER SN-C-0005 LEVEL CC.
4. THIS ITEM CONTAINS NO FRACTURE CRITICAL ELEMENTS.
3. ALL DIMENSIONS ARE IN INCHES.
2. FABRICATION TOLERANCES AND PRACTICES PER SKZ36103755.
1. INTERPRET PER JSCM 8500.

NOTES; UNLESS OTHERWISE SPECIFIED.

QTY	PART NUMBER	DESCRIPTION	MATERIAL	SPECIFICATION	NOTES
AR	73X, BLACK	INK MARKING			2
-	-001	MOUNTING BRACKET	7075-T7351 AL ALY 6.7 X 5.3 X .70	QQ-A-250/11	1

DIMENSIONAL TOLERANCE UNLESS NOTED OTHERWISE
.0 ± .1 .000 ± .010
.00 ± .03 ANGULAR ± 1°

SURFACE FINISH IN MICROINCHES RMS UNLESS NOTED OTHERWISE √

NEXT ASSY SEG46114187

SIGNATURES		DATE
DR	A. ODOM	06/04/18
ENG		4/9/97
CH		7/10/97
APP		4-10-97
QE		9/9/97
MATL		9/9/97
STRESS		4/8/97
AUTH		7/4/97

NATIONAL AERONAUTICS & SPACE ADMINISTRATION
LYNDON B. JOHNSON SPACE CENTER HOUSTON, TEXAS

BRACKET, BACKPLANE MOUNTING, SCSI LIME-HRF

CODE IDENT NO. 21356 | SIZE D | DWG NO. SDG46114691

SCALE 1/1 | EAS PROJECT: J104 | SHEET 1 OF 1

CALC WT: .24 LB
PROJECT: J104-HRF
LIBRARY: LIME
DRW FILE: 46114692.dwg

EQUIP TYPE
☒ FLT HDWR
☐ OTHER (SPECIFY)
☐ APPLICABLE ONE

093