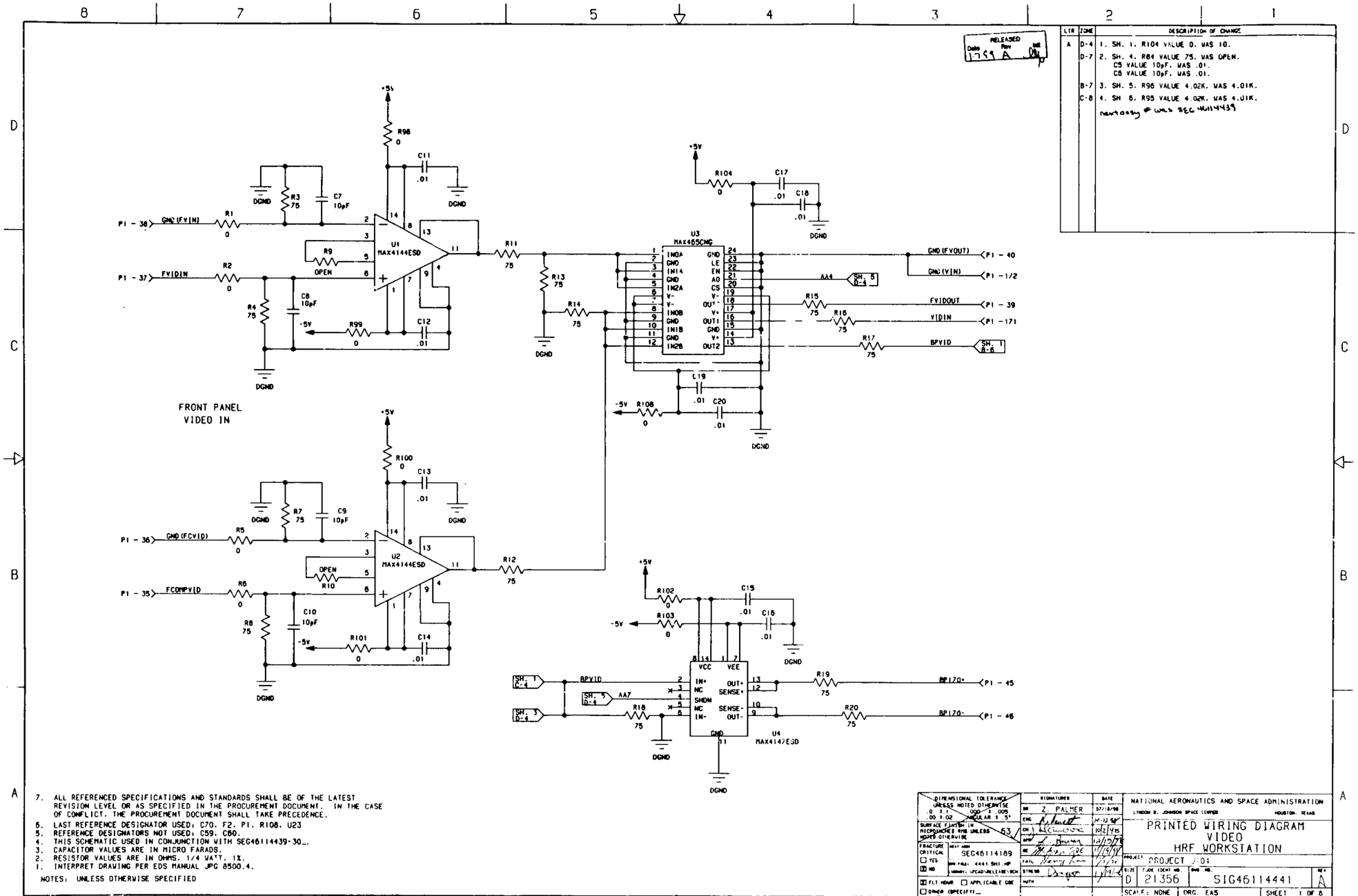

LTR	ZONE	DESCRIPTION OF CHANGE
A	D-4	1. SH. 1. R104 VALUE 0. WAS 10.
	D-7	2. SH. 4. R84 VALUE 75. WAS OPEN. C5 VALUE 10pF. WAS .01. C6 VALUE 10pF. WAS .01.
	B-7	3. SH. 5. R96 VALUE 4.02K. WAS 4.01K.
	C-8	4. SH 6. R95 VALUE 4.02K. WAS 4.01K.
		next assy # was SEG 46114439

RELEASED Date 1-7-99 Rev A Init

7. ALL REFERENCED SPECIFICATIONS AND STANDARDS SHALL BE OF THE LATEST REVISION LEVEL OR AS SPECIFIED IN THE PROCUREMENT DOCUMENT. IN THE CASE OF CONFLICT. THE PROCUREMENT DOCUMENT SHALL TAKE PRECEDENCE.
6. LAST REFERENCE DESIGNATOR USED: C70. F2. P1. R108. U23
5. REFERENCE DESIGNATORS NOT USED: C59. C60.
4. THIS SCHEMATIC USED IN CONJUNCTION WITH SEG46114439-30_.
3. CAPACITOR VALUES ARE IN MICRO FARADS.
2. RESISTOR VALUES ARE IN OHMS. 1/4 WATT. 1%.
1. INTERPRET DRAWING PER EDS MANUAL JPG 8500.4.

NOTES: UNLESS OTHERWISE SPECIFIED

DIMENSIONAL TOLERANCE UNLESS NOTED OTHERWISE .0 ±.1 .000 ±.005 .00 ±.02 ANGULAR ±.5°

SURFACE FINISH IN MICROINCHES RMS UNLESS NOTED OTHERWISE 63

FRACTURE CRITICAL ☐ YES ☒ NO

NEXT ASSY SEG46114189

DWG FILE: 4441 SH1.HP

☒ FLT HOUR ☐ APPLICABLE CSE ☐ OTHER (SPECIFY)_

SIGNATURES		DATE
DR	Z. PALMER	07/18/98
ENG	[signature]	10-13-98
CH	[signature]	10/2/98
APP	[signature]	10/13/98
QE	[signature]	10/19/98
FAIL	[signature]	10/20/98
STRESS	[signature]	10/19/98
MATH		

NATIONAL AERONAUTICS AND SPACE ADMINISTRATION
LYNDON B. JOHNSON SPACE CENTER HOUSTON, TEXAS

PRINTED WIRING DIAGRAM
VIDEO
HRF WORKSTATION

PROJECT PROJECT J-04

SIZE	CODE IDENT NO.	DWG NO.	REV
D	21356	SIG46114441	A

SCALE: NONE | ORG. EA5 | SHEET 1 OF 8

472

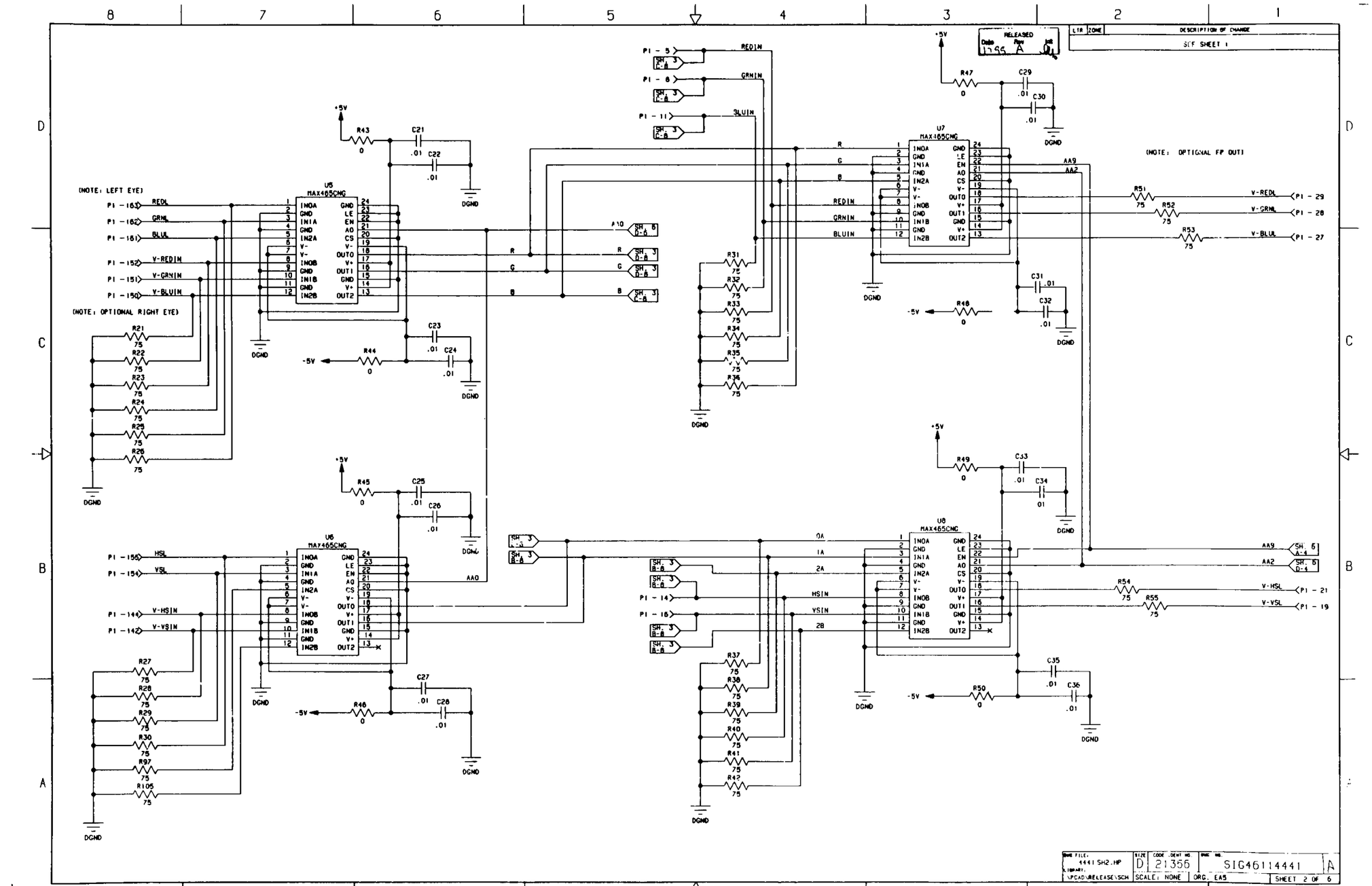

(NOTE: LEFT EYE)
(NOTE: OPTIONAL RIGHT EYE)
(NOTE: OPTIONAL FP OUT)
U5 MAX465CNG
U6 MAX465CNG
U7 MAX465CNG
U8 MAX465CNG
REDL
GRNL
BLUL
V-REDIN
V-GRNIN
V-BLUIN
HSL
VSL
V-HSIN
V-VSIN
REDIN
GRNIN
BLUIN
HSIN
VSIN
V-REDL
V-GRNL
V-BLUL
V-HSL
V-VSL
DGND
+5V
-5V
RELEASED
DESCRIPTION OF CHANGE
SEE SHEET 1
DWG FILE: 4441 SH2.HP
LIBRARY: \PCAD\RELEASE\SCH
SIZE D
CODE IDENT NO. 21356
DWG NO. SIG46114441
A
SCALE: NONE
ORG. EA5
SHEET 2 OF 6

473

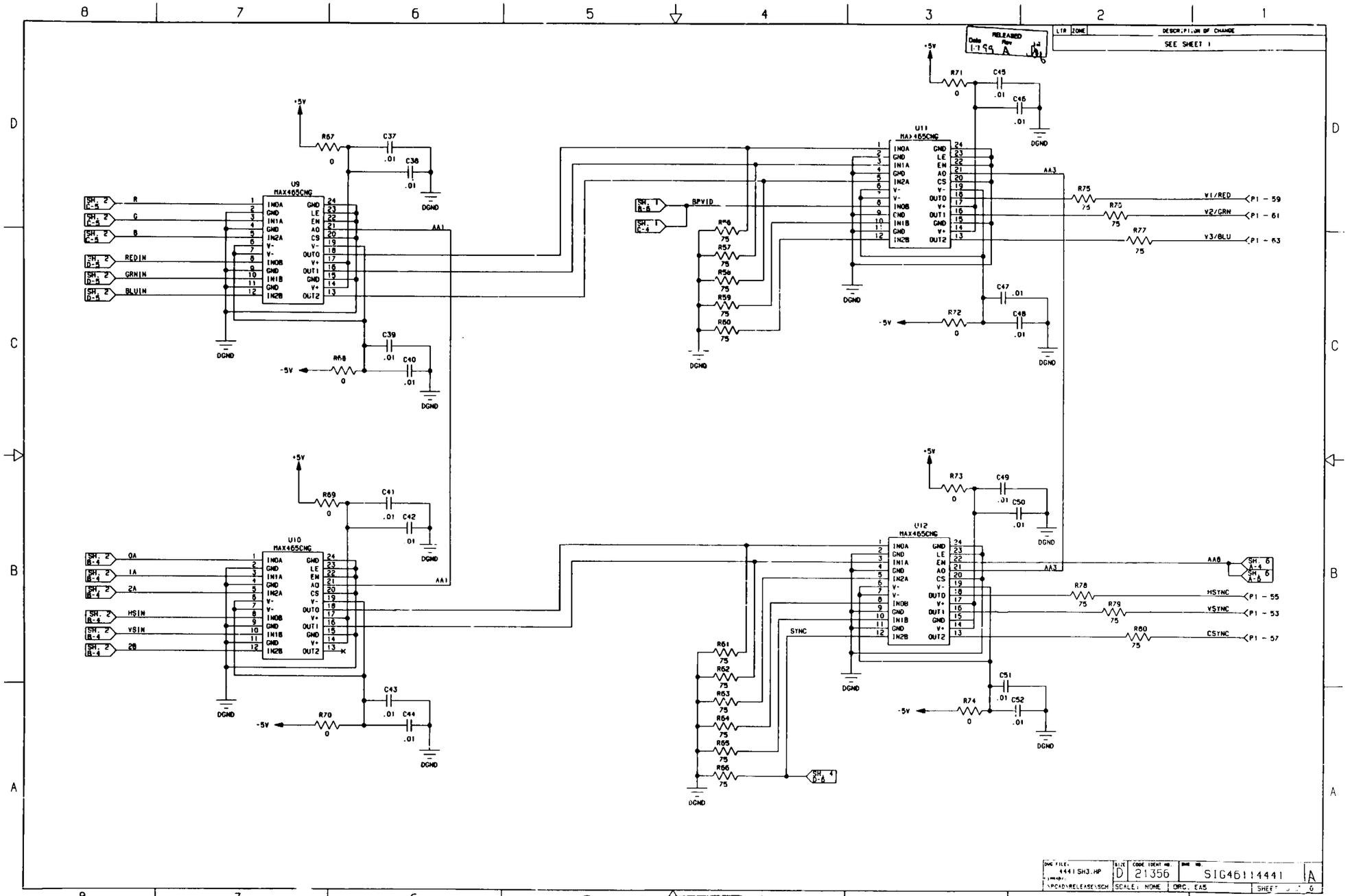

RELEASED
Date 1-7-99 Rev A
LTR ZONE DESCRIPTION OF CHANGE
SEE SHEET 1
U9 MAX465CNG
U10 MAX465CNG
U11 MAX465CNG
U12 MAX465CNG
R
G
B
REDIN
GRNIN
BLUIN
0A
1A
2A
HSIN
VSIN
2B
BPVID
SYNC
V1/RED
V2/GRN
V3/BLU
HSYNC
VSYNC
CSYNC
P1 - 59
P1 - 61
P1 - 63
P1 - 55
P1 - 53
P1 - 57
AA1
AA3
AA8
+5V
-5V
DGND
DWG FILE: 4441 SH3.HP
SIZE D
CODE IDENT NO. 21356
DWG NO. SIG46114441
A
SCALE: NONE
ORG. EA5
SHEET 6

474

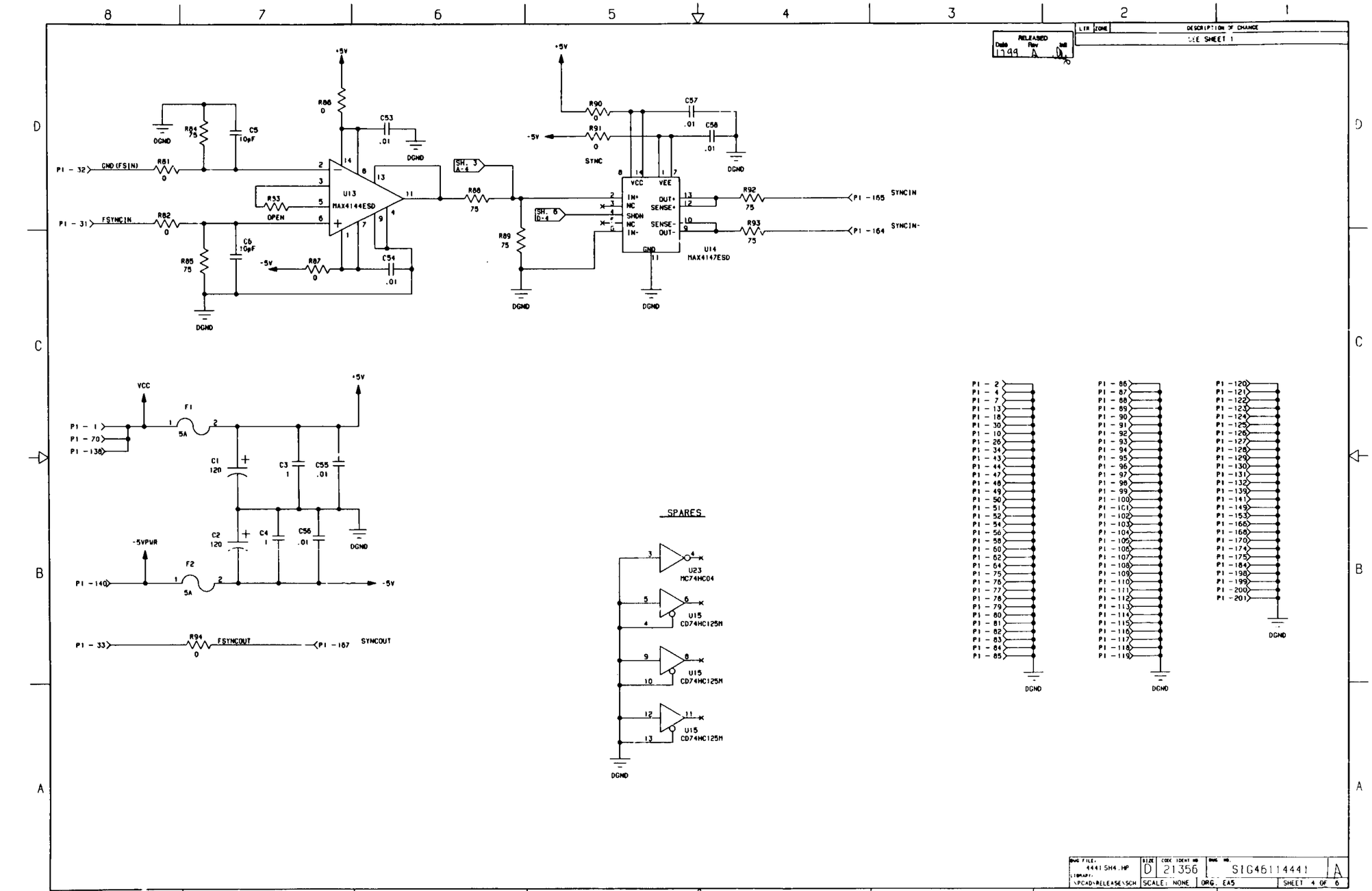

RELEASED
Date Rev Init
1799 A
LTR ZONE DESCRIPTION OF CHANGE
SEE SHEET 1
P1 - 32 GND (FSIN)
P1 - 31 FSYNCIN
U13 MAX4144ESD
R33 OPEN
R84 75
R85 75
R86 0
R87 0
R88 75
R89 75
R90 0
R91 0
R92 75
R93 75
C5 10pF
C6 10pF
C53 .01
C54 .01
C57 .01
C58 .01
SH. 3 A-4
SH. 6 D-4
SYNC
U14 MAX4147ESD
VCC VEE IN+ NC SHDN NC IN- GND OUT+ SENSE+ SENSE- OUT-
P1 - 165 SYNCIN
P1 - 164 SYNCIN-
DGND
+5V
-5V
VCC
F1 5A
F2 5A
P1 - 1
P1 - 70
P1 - 138
P1 - 140
-5VPWR
C1 120
C2 120
C3 1
C4 1
C55 .01
C56 .01
P1 - 33
R94 0
FSYNCOUT
P1 - 167
SYNCOUT
SPARES
U23 MC74HC04
U15 CD74HC125M
P1 - 2
P1 - 4
P1 - 7
P1 - 13
P1 - 18
P1 - 30
P1 - 10
P1 - 26
P1 - 34
P1 - 43
P1 - 44
P1 - 47
P1 - 48
P1 - 49
P1 - 50
P1 - 51
P1 - 52
P1 - 54
P1 - 56
P1 - 58
P1 - 60
P1 - 62
P1 - 64
P1 - 75
P1 - 76
P1 - 77
P1 - 78
P1 - 79
P1 - 80
P1 - 81
P1 - 82
P1 - 83
P1 - 84
P1 - 85
P1 - 86
P1 - 87
P1 - 88
P1 - 89
P1 - 90
P1 - 91
P1 - 92
P1 - 93
P1 - 94
P1 - 95
P1 - 96
P1 - 97
P1 - 98
P1 - 99
P1 - 100
P1 - 101
P1 - 102
P1 - 103
P1 - 104
P1 - 105
P1 - 106
P1 - 107
P1 - 108
P1 - 109
P1 - 110
P1 - 111
P1 - 112
P1 - 113
P1 - 114
P1 - 115
P1 - 116
P1 - 117
P1 - 118
P1 - 119
P1 - 120
P1 - 121
P1 - 122
P1 - 123
P1 - 124
P1 - 125
P1 - 126
P1 - 127
P1 - 128
P1 - 129
P1 - 130
P1 - 131
P1 - 132
P1 - 139
P1 - 141
P1 - 149
P1 - 153
P1 - 166
P1 - 168
P1 - 170
P1 - 174
P1 - 175
P1 - 184
P1 - 198
P1 - 199
P1 - 200
P1 - 201
DWG FILE: 4441SH4.HP
LIBRARY: \PCAD\RELEASE\SCH
SIZE D
CODE IDENT NO 21356
DWG NO. SIG46114441
A
SCALE: NONE
ORG. EA5
SHEET 4 OF 6

475

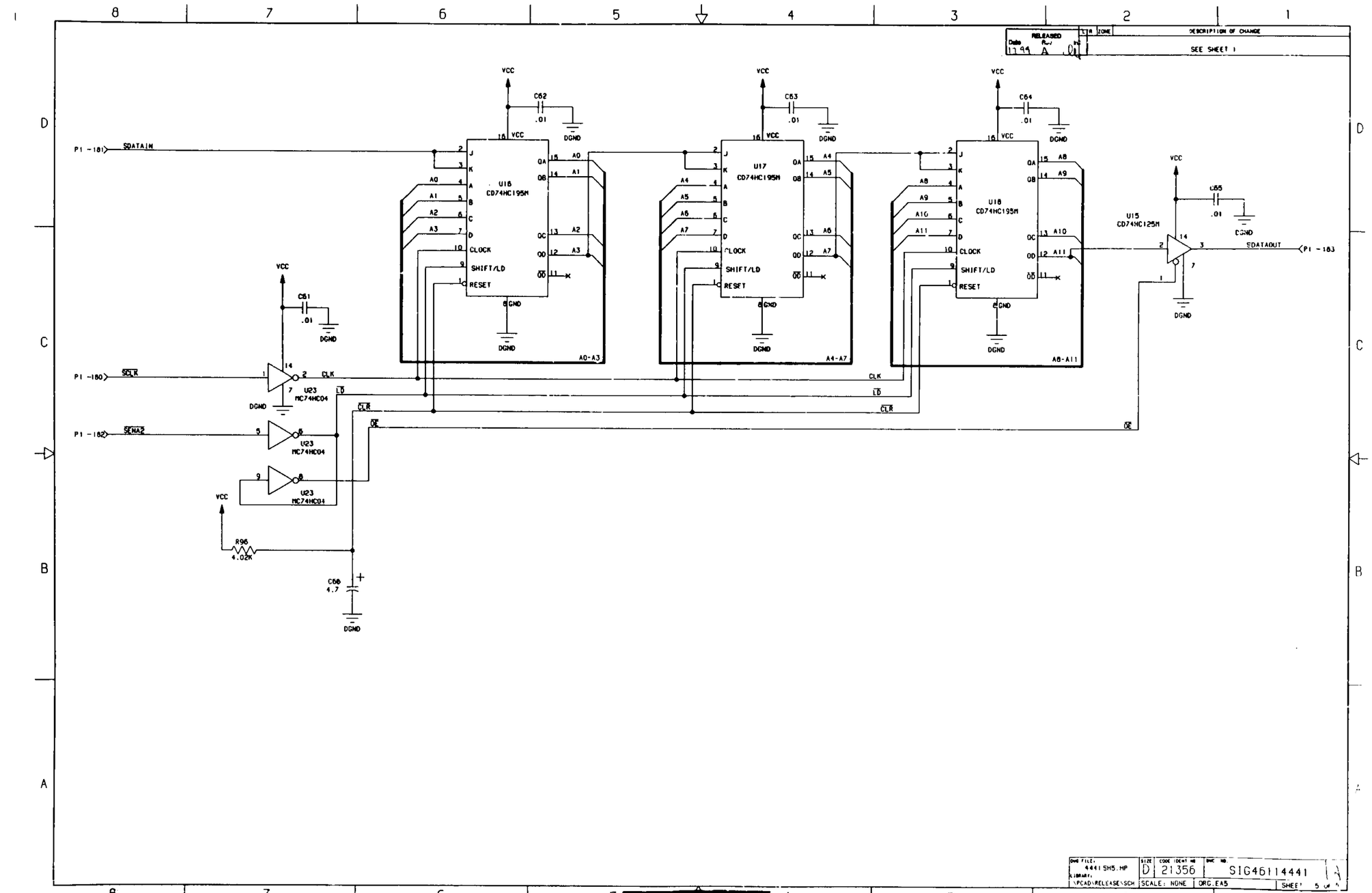

RELEASED
Date
Rev
LTR
ZONE
DESCRIPTION OF CHANGE
SEE SHEET 1
P1 -181
SDATAIN
U16
CD74HC195M
U17
CD74HC195M
U18
CD74HC195M
U15
CD74HC125M
SDATAOUT
P1 -183
P1 -180
SCLK
P1 -182
SENA2
U23
MC74HC04
VCC
DGND
CLOCK
SHIFT/LD
RESET
CLK
LD
CLR
OE
A0-A3
A4-A7
A8-A11
R96
4.02K
C66
4.7
C61
C62
C63
C64
C65
.01
DWG FILE:
4441SH5.HP
LIBRARY:
\PCAD\RELEASE\SCH
SIZE
D
CODE IDENT NO
21356
DWG NO.
SIG46114441
SCALE: NONE
ORG.EA5
SHEET 5 OF 5

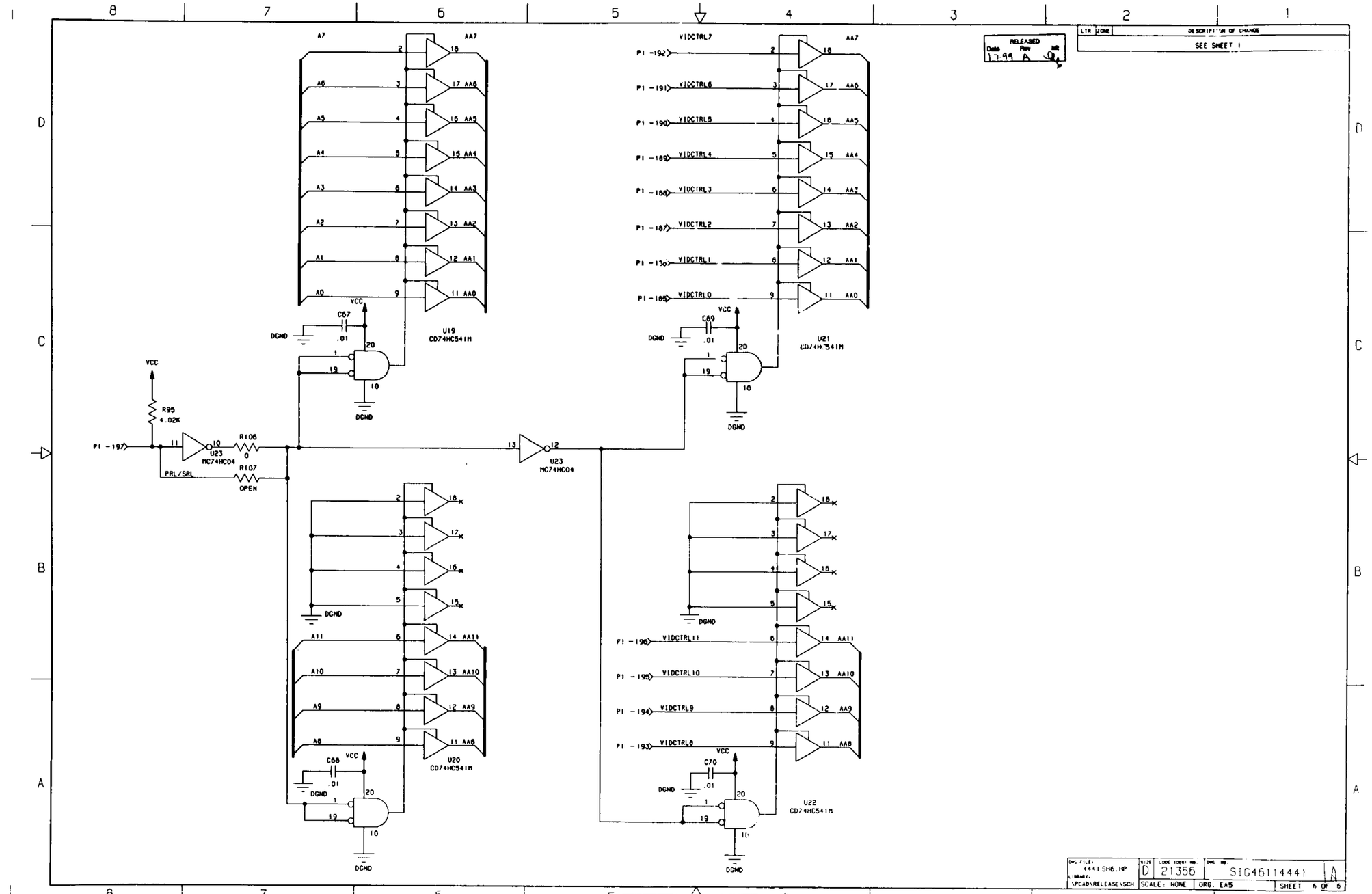
RELEASED
Date Rev Init
17.99 A
LTR ZONE DESCRIPTION OF CHANGE
SEE SHEET 1
U19
CD74HC541M
U21
CD74HC541M
U20
CD74HC541M
U22
CD74HC541M
U23
MC74HC04
R95
4.02K
R106
0
R107
OPEN
PRL/SRL
VCC
DGND
C67
C68
C69
C70
.01
P1 -197
P1 -192
P1 -191
P1 -190
P1 -189
P1 -188
P1 -187
P1 -186
P1 -196
P1 -195
P1 -194
P1 -193
VIDCTRL7
VIDCTRL6
VIDCTRL5
VIDCTRL4
VIDCTRL3
VIDCTRL2
VIDCTRL1
VIDCTRL0
VIDCTRL11
VIDCTRL10
VIDCTRL9
VIDCTRL8
A7
A6
A5
A4
A3
A2
A1
A0
A11
A10
A9
A8
AA7
AA6
AA5
AA4
AA3
AA2
AA1
AA0
AA11
AA10
AA9
AA8
DWG FILE: 4441SH6.HP
LIBRARY: \PCAD\RELEASE\SCH
SIZE D
CODE IDENT NO 21356
DWG NO SIG46114441
A
SCALE: NONE
ORG. EAS
SHEET 6 OF 6