LTR	ZONE	DESCRIPTION OF CHANGE
B		SH.1. PARTS LIST:
		1. ADDED ITEMS 14.19. AND 20-22.
		2. ADDED FLAG NOTE 13 CALLOUT TO ITEMS 7 AND 8.
		3. ITEM 16 DES. STEEL CARBON. NAS CRES 300 SERIES.
	C-8	4. ADDED FLAG NOTES 13-17.
		5. REMOVED ULTRASOUND FROM TITLE BLOCK
		SH.2:
	C-4	6. ADDED BALLOON ITEMS 21.22. AND FLAG NOTE 15 CALLOUT TO FIELD OF DRAWING.

Date 5 20 99 B

-302	-301	PART NUMBER	DESCRIPTION	MTRL/REF. DESIGNATOR	SPECIFICATION	ITEM
	AR	222-21	LOCTITE		16	22
	2	A9006-MD	SCREW LOCK		15 17	21
	AR	2713	THINNER. NAPTHA		14	20
	AR	1204	PRIMER		3	19
2	2	TE-7703-115	WASHER. THIN	TEFLON 15	9	18
2	2	MS21043-04	NUT. LOCKING	CRES A-286 4-40UNJC-3B		17
2	2	NAS620C4	WASHER. FLAT	STAINLESS STEEL NO. 4(.112)		16
2	2	NAS1101E04-8	SCREW. MACH. HD.	CRES A-286 .1120-40 UNJC-3A		15
	AR	5413-1	TAPE. KAPTON			14
AR		M22759/22-26-0	WIRE. 26 AWG		MIL-W-22759	13
1	1	CKR06BX104KS	CAPACITOR. .1uF. 100V	C5	MIL-C-11015/18	12
	2	251007	FUSE. 7A	F1.F2	12 7	11
1	1	WTB30SAD9J	30 PIN SOCKET CONNECTOR	J2	6	10
1	1	DAMZ7H2PNK07	7 PIN CONNECTOR	J1	5	9
	1	3031R-T15	DC/DC CONVERTER	U2 13	12 4	8
	1	3030R-D12	DC/DC CONVERTER	U1 13	12 4	7
1		3031R-S28	DC/DC CONVERTER	U1	4	6
AR	AR	3140	SEALANT		3	5
AR	AR	73X	INK. MARKING. WHITE		1	4
AR	AR	63/37.025P3REL15	SOLDER			3
						2
1	1	SDD46114436-001	PWB. AUXILLARY POWER SUPPLY			1
REF		SID46117162	SCHEMATIC. AUXILLARY POWER SUPPLY			
	REF	SID46114435	SCHEMATIC. AUXILLARY POWER SUPPLY			
-		-302	PWBA. AUXILLARY POWER SUPPLY			
	-	-301	PWBA. AUXILLARY POWER SUPPLY			

17 AMP CORP. . HARRISBURG. PA.

16 LOCTITE CORP.. ROCKYHILL CT.

15 INSTALL SCREW LOCK (ITEM 21) AND WASHER (ITEM 18) USING LOCTITE (ITEM 22). PER JHB 8080.5 STD. M/P-10.

14 PARK. SUMMERSET. MA.

13 PRIME PER NAS 5300.4 (3J-1) PARA. 3J402. USING PRIMER (ITEM 19). AFTER MASKING CONNECTORS J1 AND J2. BRUSH APPLY CONFORMAL COATING (ITEM 5) THINNED WITH 2713 NAPTHA (ITEM 20) TO BOTH SIDES OF PRINTED WIRING BOARD. .003 - .004 (.1MM - .2MM) THICK PER NAS 5300.4 (3J-1). PARA. 3J500. 3J501. AND 3J502. (DO NOT APPLY CONFORMAL COATING TO CASE OF U1 AND U2).

12 NOT INSTALLED FOR -302

11 INSTALL JUMPER ACROSS F1 LOCATION USING ITEM 13 WIRE AND SECURE WITH ITEM 5 SEALANT FOR -302

10 CONVERTERS (ITEMS 6. 7 & 8) WILL BE MARKED WITH TRIANGLE IN THE QUADRANT CONTAINING PIN 1.

9 GLOBE ELECTRONICS. WOODSIDE. NY.

8 DO NOT INSTALL COMPONENTS AT LOCATIONS C1-C4.

7 LITTELFUSE. DES PLAINES. IL.

6 AIRBORN. ADDISON. TX.

5 ITT CANNON. SANTA ANNA. CA.

4 MODULAR DEVICES. SHIRLEY. NY.

3 DOW CORNING. MIDLAND. MI.

2 PERMANENT INK MARK S/N AND REV. IN .12 HIGH CHARACTERS WITH 73X WHITE INK PER NASA/JSC PRC-9002. SERIAL NUMBERS SHALL BE ASSIGNED BY EDCC IN ACCORDANCE WITH EDS MANUAL JPG 8500.4. PARA 3.1.2. LOCATE APPROXIMATELY AS SHOWN.

1 INDEPENDENT INK INC.. GARDENA. CA.

FLAG NOTES:

8. ALL REFERENCED SPECIFICATIONS AND STANDARDS SHALL BE OF THE LATEST REVISION LEVEL OR AS SPECIFIED IN THE PROCUREMENT DOCUMENT. IN THE CASE OF CONFLICT. THE PROCUREMENT DOCUMENT SHALL TAKE PRECEDENCE.
7. TORQUE NO. 4 FASTENERS TO 77-91 IN. OZ. ABOVE RUNNING TORQUE.
6. ASSEMBLY PER PRC-7005.
5. THIS ASSEMBLY CONTAINS ESD-SENSITIVE COMPONENTS. HANDLE COMPONENTS AND ASSEMBLY PER NASA-STD-8739.7
4. THIS ASSEMBLY DOES NOT CONTAIN FRACTURE CRITICAL PARTS.
3. CLEANLINESS REQUIREMENTS PER SN-C-0005 GC LEVEL
2. SOLDER COMPONENTS PER NASA/JSC PRC-7001.
1. INTERPRET PER EDS MANUAL JPG 8500.4.

NOTES: UNLESS OTHERWISE SPECIFIED.

DIMENSIONAL TOLERANCE UNLESS NOTED OTHERWISE .0 ±.1 .00 ±.03 .000 ±.010 ANGLE ± .5 DEG

SURFACE FINISH-RA MICROINCHES AND UNLESS NOTED OTHERWISE

FRACTURE CRITICAL: NO / YES

HEAT SOAK: N/A

DWG FILE: 44372A1B.HP LOCATION: \PEAD\RELEASE\ASSY

FLT HDWD / APPL HANDLE SEE / OTHER (SPECIFY)

SIGNATURES		DATE
DR	R NORMAN	1/12/99
ENG		1/12/99
CH		2/4/99
APP		2/4/99
QE		2/4/99
MATL		2/8/99
STRESS		2/8/99
MATH		

NATIONAL AERONAUTICS & SPACE ADMINISTRATION

GEORGE C. MARSHALL SPACE FLIGHT CENTER HUNTSVILLE, ALABAMA

PRINTED WIRING ASSEMBLY
AUXILLARY POWER SUPPLY

PROJECT B104

SIZE D | CODE IDENT NO. 21356 | DWG NO. SED46114437 | REV. B

SCALE 2 / 1 | ORG. EAS | SHEET 1 OF 3

476

LTR	ZONE	DESCRIPTION OF CHANGE
B		SEE SHEET 1.

RELEASED
Date Nov 1988
52099

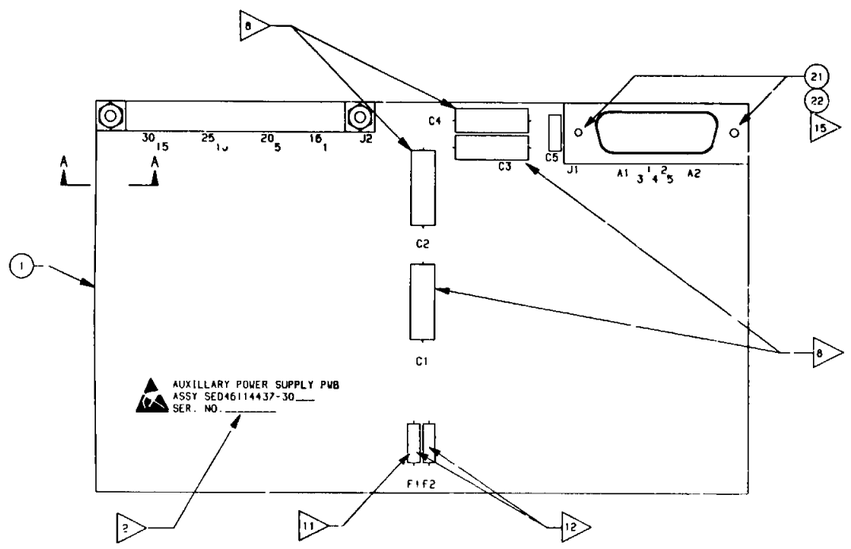

-301 AND -302 ASSY (COMPONENT SIDE)

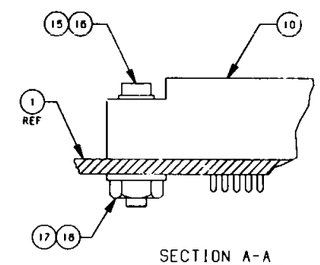

SECTION A-A

SCALE: NONE
2 PLACES

4437 2A28.HP \PCAD\RELEASE\ASSY	D 21356	SED46114437	B
SCALE 2 / 1	ORG. EAS	SHEET 2 OF 3	

477

LTR	ZONE	DSECRIPTION OF CHANGE
B		SEE SHEET 1.

RELEASED
Date Rev Init
52099 B

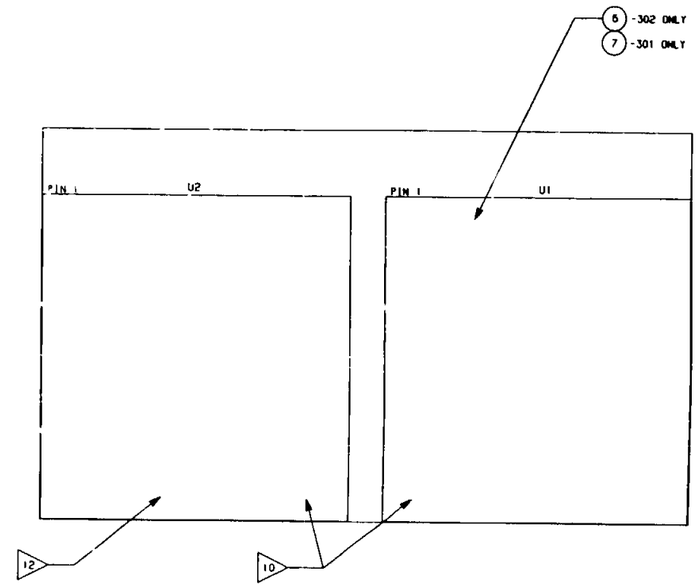

-301 AND -302 ASSY (SOLDER SIDE)

44372A38.HP	D	21356	SED46114437	B
\PCAD\RELEASE\ASSY	SCALE 2 / 1	ORG. EA5	SHEET 3 OF 3	

478