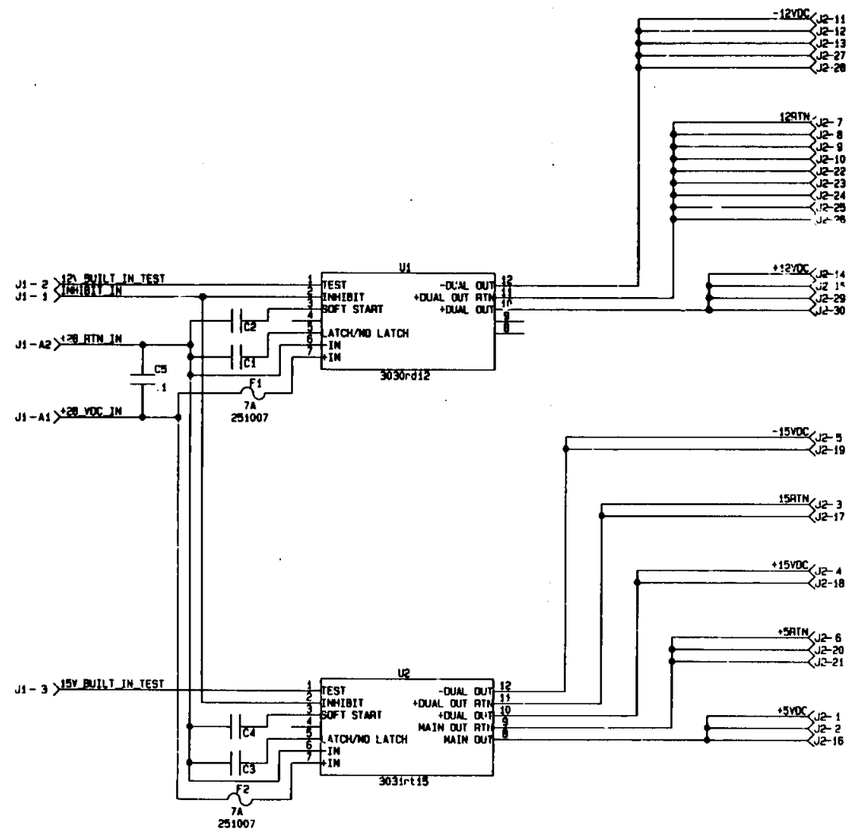

5. C1-C4 ARE NOT INSTALLED.
4. LAST REFERENCE DESIGNATOP USED: C5, U2, J2, F2.
3. THIS SCHEMATIC USED IN CONJUNCTION WITH SED46114437-301.
2. CAPACITOR VALUES ARE IN MICRO FARADS.
1. INTERPRET DRAWING PER JSCM 8500.

NOTES: UNLESS OTHERWISE SPECIFIED

SIGNATURES	DATE
DR CINDY EAVES	5-20-97
CHK [signature]	5/7/97
CH [signature]	5/7/97
APP [signature]	6/17/97
RE [signature]	6/17/97
DATA [signature]	6/28/97
STRESS [signature]	5/21/97
AUTH [signature]	6/24/97

NATIONAL AERONAUTICS & SPACE ADMINISTRATION
LYNDON B. JOHNSON SPACE CENTER HOUSTON, TEXAS

PRINTED WIRING DIAGRAM
AUXILLARY POWER SUPPLY
HRF WORKSTATION

CODE IDENT NO. 21356 | SIZE D | DWG NO. SID46114435 | REV

SCALE NONE | EAS PROJECT: 8104 | SHEET 1 OF 1

CALC NO.

NEXT ASSY SED46114437

DWG FILE \PCAD\RELEASE\SCH

DWG FILE 4435SH1.HP

DRAWING TYPE: ☒ FLT HDWR ☐ OTHER SPECIFIC ☐ APPLICABLE DWG

253