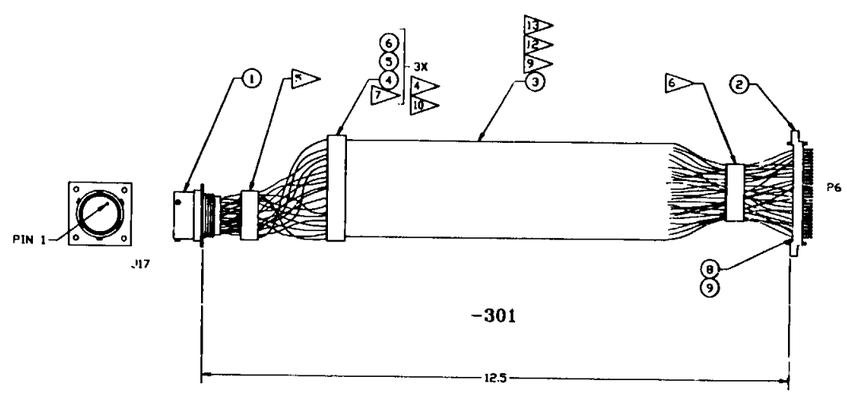

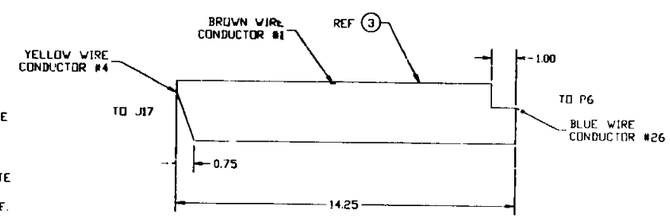

DETAIL A

13> PREPARE RIBBON CABLE (ITEM 3) AS GIVEN IN DETAIL A.

12> REMOVE AND DISCARD THE LAST CONDUCTOR; USE A 49-CONDUCTOR STRIP. USE BROWN WIRE AT J17 PIN 1.

11> PANDUIT CORP., TINLEY PARK, IL.

10> MAKE LABEL ONLY WIDE ENOUGH TO ACCOMMODATE PRINT; NO WIDER THAN 0.5 INCHES.

9> CABLE MUST REMAIN FLAT AS MUCH AS POSSIBLE. AVOID PLEATS AND FOLDS.

8> W. L. GORE AND ASSOC. INC., PHOENIX, AZ.

7> TYPE LABEL IDENTIFICATION AS SHOWN USING BRADY MARKER XC PLUS PRINTER AND (ITEM 4) ROLL FILM FOR CABLE MARKING. AT THE DESIRED LOCATION, WRAP CABLE 2-3 TIMES WITH (ITEM 6) GLASS CLOTH TAPE. PLACE (ITEM 4) ROLL FILM ON (ITEM 6) GLASS CLOTH TAPE WITH MARKING SHOWING, AND WRAP TWICE WITH (ITEM 5) CLEAR TAPE. CUT OFF ANY EXCESS MATERIAL.

6> MARK LABEL "P6 SCSI LINE".

5> MARK LABEL "J17".

4> MARK LABEL "SEG46114218-301 S/N 100X SCSI W27".

3> 3M CO., ST. PAUL, MN.

2> BRADY CO., MILWAUKEE, WI.

1> AIRBORN INC., ADDISON, TX.

NOTES:

6. SOLDER PER NAS 5300.4(3A-2)
5. THIS ASSEMBLY CONTAINS NO FRACTURE CRITICAL ELEMENTS.
4. CLEANLINESS REQUIREMENTS PER SN-C-0005 LEVEL GC.
3. FABRICATE TO IEEE 383 MIL-EIA/IS-43, UNDERWRITER REGISTERED 2651 TEST IN ACCORDANCE WITH ASTMD4566.
2. ALL DIMENSIONS ARE IN INCHES.
1. INTERPRET PER JSCM 8500.

NOTES: UNLESS OTHERWISE SPECIFIED

AR	63/37SnPb	SOLDER		00-S-571	9
AR	M23053/8 002 C	HEAT SHRINK TUBING	POLYVINYLIDENE FLOURIDE	MIL-I-23053	8
AR	PLT1M-C76	CABLE TIE	TEFZEL		7
AR	361-1	GLASS CLOTH TAPE			6
AR	800-1 1/2	TAPE, CLEAR			5
AR	VRCM 717 637W	CABLE MARKER	VINYLAR ROLL FILM		4
15'	GTS 811 26 7 S-50	RIBBON CABLE	TEFLON		3
1	WGV80PCJTB	CONNECTOR, 80 PIN			2
1	MS27497T16J35SB	CONNECTOR 55 PIN		MIL C 38999	1
-	-301	CABLE ASSEMBLY			
301	PART NUMBER	DESCRIPTION	MATERIAL	SPECIFICATION	ITEM

SIGNATURES	DATE
DR N.C. WHITE	10/28/96
CHK	3/4/97
APP	5/21/97
DE	3/20/97
MATL	3/20/97
STRESS	3/4/97
AUTH	11/97

NATIONAL AERONAUTICS & SPACE ADMINISTRATION
LYNDON B. JOHNSON SPACE CENTER HOUSTON, TEXAS

W27 FRONT PANEL SCSI CABLE, VEG

CODE IDENT NO.	SIZE	DWG NO.
21356	D	SEG46114218

SCALE NONE | 51590-A004 | SHEET 1 OF 2

HEAT ASSY SEG46114981

COMP TYPE: FLT HOUSE / OTHER (SPECIFY) CRC / APPLICABLE USE

CALC VOL

MOD FILE

DRW FILE: F114218A.dwg

[redacted]

WIRE DATA LIST

FUNCTION	FROM	PIN NO.	TO	PIN NO.	WIRE	LENGTH
GND	J17	1	P6	3	GTS-811-26-7-S-50	18.00
SCZDB0		2		2		
GND		3		5		
SCZDB1		4		4		
GND		5		7		
SCZDB2		6		6		
GND		7		9		
SCZDB3		8		8		
GND		9		11		
SCZDB4		10		10		
GND		11		37		
SCZDB5		12		12		
GND		13		66		
SCZDB6		14		13		
GND		15		43		
SCZDB7		16		16		
GND		17		17		
SCZBP		18		18		
GND		19		19		
GND		20		20		
GND		21		21		
GND		22		22		
GND		23		23		
GND		24		24		
TERMPWR		25		26		
GND		26		29		
GND		27		55		
GND		28		30		
GND		29		56		
GND		30		31		
SCZATN		31		32		
GND		32		33		
GND		33		34		
GND		34		35		
SCZBSY		35		36		
GND		36		63		
SCZACK		37		38		
GND		38		64		
SCZRST		39		39		
GND		40		65		
SCZMSG		41		42		
GND		42		45		
SCZSEL		43		44		
GND		44		47		
SCZCD		45		46		
GND		46		51		
SCZREQ		47		48		
GND		48		52		
SCZID		49	P6	50	GTS-811-26-7-S-50	18.00
NOT CONNECTED		50				
NOT CONNECTED		51				
NOT CONNECTED		52				
NOT CONNECTED		53				
NOT CONNECTED		54				
NOT CONNECTED	J17	55				

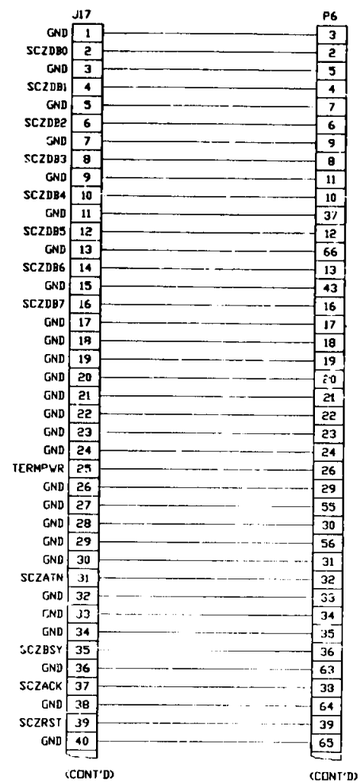

WIRING DIAGRAM

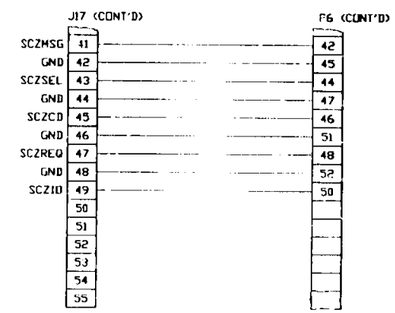

WIRING DIAGRAM

DIMENSIONAL TOLERANCE UNLESS NOTED OTHERWISE 0 ± .1 .000 ± .010 .00 ± .03 ANGULAR ± 0	SIGNATURES	DATE	NATIONAL AERONAUTICS & SPACE ADMINISTRATION LYNDON B. JOHNSON SPACE CENTER HOUSTON, TEXAS
SURFACE FINISH IN MICROINCHES RMS UNLESS NOTED OTHERWISE	DR N.C. WHITE	10/28/96	W27 FRONT PANEL SCSI CABLE, VEG
NEXT ASSY N/A	ENG	2/26/97	
	CH	3/4/97	
	APP	3/4/97	
	QC	3/20/97	
	MATL	3/20/97	
	STRESS	3/4/97	CODE IDENT NO 21356 · SIZE D · DWG NO SEG46114218
	AUTH	3/4/97	SCALE NONE · J104 · SHEET 2 OF 2

CALC WT
MOD FILE
DRV FILE F114218B.dwg

FOUR TYPE
[X] FLT HDWR
[ ] OTHER (SPECIFY) ESE
[ ] APPLICABLE GSE

DRAWING CHANGE NOTICE

SHEET 1 OF 2

NUMBER: 22013	DATE: 07/18/97	REASON FOR CHANGE: IMPLEMENTED CONFIGURATION CHANGES	ORIGINATOR: CHRIS NUNEZ	DATE: 07/24/97	QE: M. [illegible] SQE	DATE: 8/4/97
DRAWING NO.: SEG46114218	REV: NC		ENG: H. Chan	7/25/97	MATL: [illegible]	7/25/97
TITLE: W27 FRONT PANEL SCSI CABLE, VEG			CH: R.A. [illegible]	7/25/97	STRESS: [illegible]	7/28/97
PROJECT: STS90-J104	DRAWING TO BE CHANGED: YES ☒ NO ☐		APP: [illegible]	8/5/97	RELEASE STAMP: RELEASED Date 8-8-97 Rev NC Init Pm	
EXISTING MATL/PARTS: USE AS IS ☐ RETURN TO STOCK ☐ REWORK ☒ CONDEMN ☐	EFFECTIVITY: MODEL -301; SERIAL NO. NA	☒ FLT HDWR ☐ APPLICABLE GSE ☐ OTHER (SPECIFY)	AUTH: [illegible]	8/5/97		

DESCRIPTION OF CHANGE

SHEET 1 OF 2, ZONE A,8.

"WAS"

4 MARK LABEL "SEG46114218-301 S/N 100X SCSI W27".

"IS"

4 MARK LABEL "SEG46114218-301 SCSI W27".

SHEET 1 OF 2, ZONE A,6.

"WAS"

3. FABRICATE TO IEEE 383 NQ-EIA/IS-43, UNDERWRITER REGISTERED 2651. TEST IN ACCORDANCE WITH ASTMD4566.

"IS"

3. FABRICATE AND TEST PER LS-60035.

PART NUMBER	DESCRIPTION	MATERIAL	SPECIFICATION	CHANGE

JSC Form 1040A (Rev Jan 90)

370

NUMBER 122013	DATE 7/24/97	DRAWING CHANGE NOTICE	SHEET 2 OF 2
DRAWING NO. SEG46114218	REV NC		

RELEASED
Date 8-8-97 Rev NC Init fm

SHEET 1 OF 2, ZONE B,8.

"ADD FLAG NOTE 14"

14 PART NUMBER MIL-C-49055/12-28-J IS AN ACCEPTABLE SUSTITUTE.

SHEET 1 OF 2, ZONE B,2.

"WAS"

15"	GTS-811-26-7-S-50	RIBBON CABLE	TEFLON	8	3

"IS"

15"	GTS-811-26-7-S-50	RIBBON CABLE	TEFLON	8	14	3

SHEET 2 OF 2, ZONE A,3.

"WAS"

NEXT ASSY
N/A

"IS"

NEXT ASSY
SEG46114981

PART NO.	DESCRIPTION	MATL	SPEC	CHANGE

371

DCN NUMBER			DRAWING CHANGE NOTICE					SHEET 1 OF 1
DRAWING NO. SEG46114218	REV NC	SEQ.# 01	REASON FOR CHANGE DRAFTING ERROR	ORIGINATOR DON E. SCYPION	DATE 5/28/98	QE M. IWASA	DATE 6/5/98	
DRAWING TITLE W27 FRONT PANEL SCSI CABLE, VEG				ENG SAMME LANSDOWNE	5/28/98	MATL H. KAO	6/2/98	
				CH R. A. BULAND	5/28/98	STRESS D. VAN	5/29/98	
PROJECT B104				APP F. BOOKER	5/29/98			
				AUTH		FINAL APP		

SHT 1: ZONE D-8

MOVE KEYWAY POSITION AS SHOWN:

"WAS"

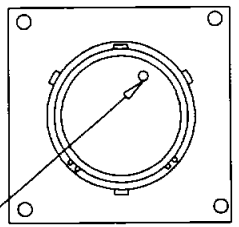

PIN 1

"IS"

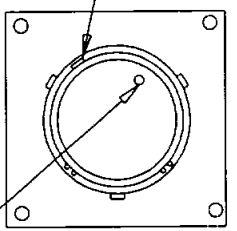

PIN 1

	PART NUMBER	DESCRIPTION	MATERIAL	SPECIFICATION		(IS) (WAS)

DWG FILE: PROJECT: LIBRARY:

2-RIGHT