LTR	ZONE	REVISION	DATE	EQUIP TYPE	APPROVAL

6/11/97 NC QH

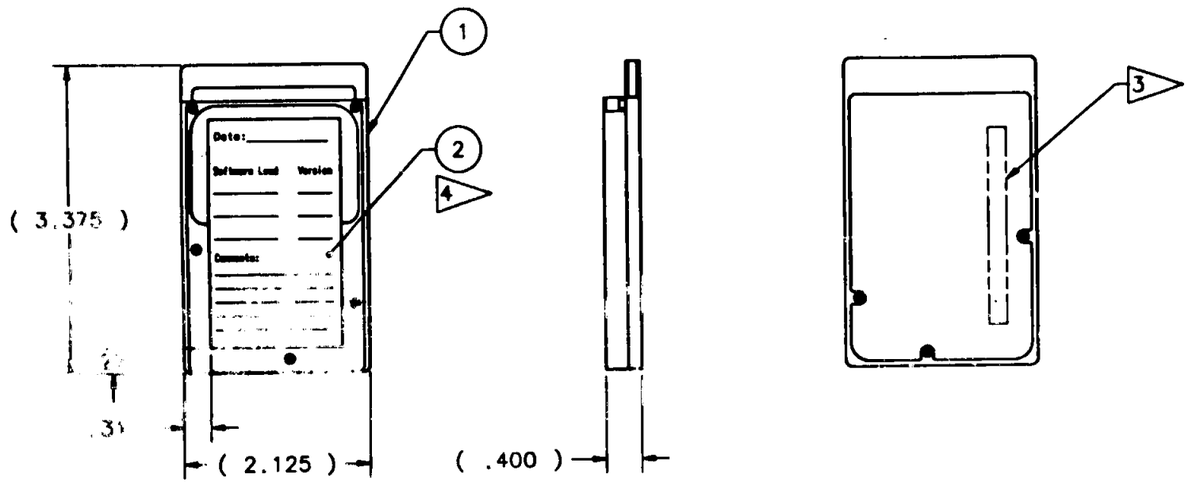

-701

4 PEEL PAPER OFF OF BACK OF LABEL (ITEM 2) AND STICK ON VIPER340 (ITEM 1) APPROXIMATELY AS SHOWN.

3 MARK PN IN .12 HIGH CHARACTERS WITH MARKING INK (ITEM 3) PER JSC-SPEC-M1 PARA 3.7.8.

2 INDEPENDENT INK INC, GARDENA, CA.

1 INTEGRAL PERIPHERALS INC, DENVER, CO.

NOTES:

4. CLEANLINESS REQUIREMENTS PER SN-C-0005 LEVEL GC.
3. THIS ASSEMBLY CONTAINS NO FRACTURE CRITICAL ELEMENTS.
2. ALL DIMENSIONS ARE IN INCHES.
1. INTERPRET PER SCM 8500.

NOTES: UNLESS OTHERWISE SPECIFIED.

-701	PART NUMBER	DESCRIPTION	MATERIAL	SPECIFICATION	ITEM
AR	73X, BLACK	INK, MARKING		2	3
1	SDG46115664-004	DECAL			2
1	8340PA	VIPER340		1	1
-	-701	PCMCIA HARD DRIVE			

DIMENSIONAL TOLERANCE UNLESS NOTED OTHERWISE
.0 ± .1 .000 ± .010
.00 ± .03 ANGULAR ± 1°

SURFACE FINISH IN MICROINCHES RMS UNLESS NOTED OTHERWISE √

NEXT ASSY SEG46114183

CALC WT: -

PROJECT: J104-HRF-VEG
LIBRARY: -
DRW FILE: 46114191.dwg

EQUIP TYPE
☒ FLT HDWR
☐ OTHER (SPECIFY)
☐ APPLICABLE GSE

SIGNATURES	DATE
DR C. SHANNON	5/7/97
ENG [signature]	5/7/97
CH R.A. [signature]	5/7/97
APP C. [signature]	6/5/97
QE M. [signature] SQE	6/5/97
MATL [signature]	5-19-97
STRESS [signature]	5/11/97
AUTH D.H. [signature]	6/10/97

NATIONAL AERONAUTICS & SPACE ADMINISTRATION
LYNDON B. JOHNSON SPACE CENTER HOUSTON, TEXAS

PCMCIA HARD DRIVE
VEG/HRF
ALTERED ITEM DRAWING

CODE IDENT NO.	SIZE	DWG NO.
21356	C	SDG46114191

SCALE 1/1 SE PROJECT: J104 SHEET 1 OF 1

176