LTR	ZONE	REVISION	DATE	EQUIP TYPE	APPROVAL

22 ACCURATE SCREW MACHINE CO., FAIRFIELD, NJ.

21 WAKEFIELD ENGINEERING, SUNNYVALE, CA.

20 ATTACH HEAT SINK (ITEM 15) TO THIS COMPONENT USING ADHESIVE (ITEM 20).

19 COVER THIS COMPONENT WITH TAPE (ITEM 14). THEN SECURE TAPE TO PWB USING ADHESIVE (ITEM 5), THEN APPLY CONFORMAL COATING OVER TAPE. DO NOT REMOVE TAPE AFTERWARDS. LEAVE COMPONENT COVERED.

18 APPLY ADHESIVE (ITEM 5) TO COMPONENT PER NHB 5300.4 (3J), PARA 3J600, 3J601, AND 3J602. AND 3J602.

17 APPLY CONFORMAL COATING (ITEM 4) THINNED WITH NAPTHA (ITEM 19) TO BOTH SIDES OF BOARD PER NHB 5300.4 (3J) PARA 3J500, 3J501, AND 3J502.

16 PRIME PER NHB 5300.4 (3J) PARA 3J402 USING 1204 PRIMER (ITEM 2).

15 AMP, HARRISBURG, PA.

14 3COM CORP., SANTA CLARA, CA.

13 MASTER BOND INC., HACKENSACK, NJ.

12 TERMINATE BOTH SHIELD WIRES WITH ONE TERMINAL LUG (ITEM 11) AND SECURE TO SCREW AS SHOWN.

11 MASK OFF AREA AS SHOWN AND DO NOT APPLY CONFORMAL COAT TO THIS AREA.

10 SOLDER PER WIRE LIST, IN ACCORDANCE WITH NAS 5300.4 (3A-2) USING SOLDER (ITEM 9). SECURE WIRES WITH CABLE TIE (ITEM 13) AS NECESSARY.

9 INSERT CONNECTOR (ITEM 6) INTO BRACKET. SECURE WITH SCREW ASSEMBLY (ITEM 7) AND ADHESIVE (ITEM 12) AFTER DISCARDING LOCKING WASHER.

8 DESOLDER AND DISCARD PHONE JACK CONNECTOR AND COAX CONNECTOR. DISCARD SLIDE LOCK ASSEMBLY.

7 DESOLDER AND DISCARD RIGHT ANGLE 15 PIN CONNECTOR.

6 PERMANENTLY INK STAMP ESD SYMBOL IN APPROX. LOCATION SHOWN, USING (ITEM 3) INK.

5 PERMANENT INK MARK P/N AND SERNO IN .125 HIGH CHARACTERS WITH MARKING INK (ITEM 3) PER JSC-SPEC-M-1, PARA 3.7.8. THE FIRST PRODUCTION RUN WILL BEGIN WITH S/N 1001 PER JSC 8500.3. LOCATE APPROXIMATELY AS SHOWN.

4 LOCTITE CORP., NEWINGTON, CT.

3 INDEPENDENT INK INC., GARDENA, CA.

2 DOW CORNING, MIDLAND, MI.

1 PANDUIT CORP., TINLEY PARK, IL.

FLAG NOTES:

6. THIS ASSEMBLY CONTAINS NO FRACTURE CRITICAL ELEMENTS.
5. ALL REFERENCED SPECIFICATIONS AND STANDARDS SHALL BE OF THE LATEST REVISION LEVEL OR AS SPECIFIED IN THE PROCUREMENT DOCUMENT. IN THE CASE OF CONFLICT, THE PROCUREMENT DOCUMENT SHALL TAKE PRECEDENCE.
4. THIS ASSEMBLY CONTAINS SOME COMPONENTS THAT ARE ESD SENSITIVE. HANDLE PER NAS 5300.4 (3L).
3. BAG AND TAG PER JSC-SPEC-M-1, PARA 3.7.9
2. CLEANLINESS REQUIREMENTS PER SN-C-0005, VC LEVEL SENSITIVE.
1. INTERPRET PER JPG 8500.4.

NOTES: UNLESS OTHERWISE SPECIFIED

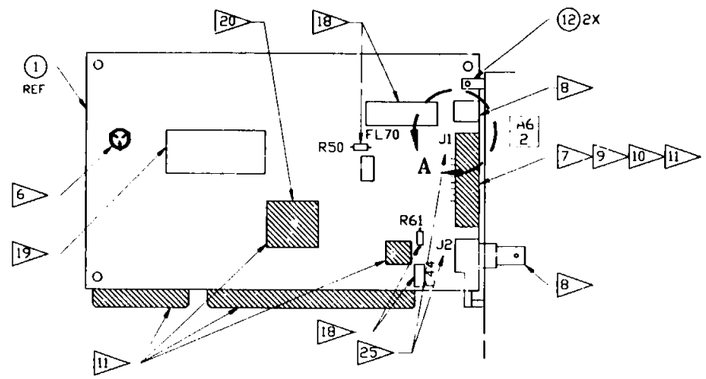

-301

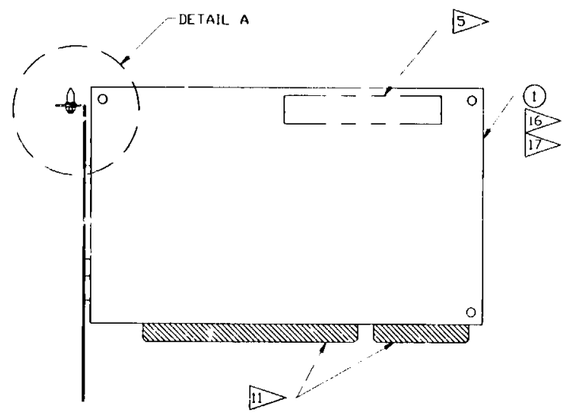

VIEW OF REVERSE SIDE

28 DO NOT INSTALL GUIDE PIN ASSEMBLY UNTIL AFTER THE BOARD HAS BEEN TESTED.

27 DIGIKEY P/N A9006-ND IS EQUIVALENT.

26 DIGIKEY P/N A1033-ND IS EQUIVALENT.

25 PERMANENT INK MARK REFERENCE DESIGNATORS USING MARKING INK (ITEM 3) AS SHOWN.

24 PARKS CORP., SOMERSET, MA.

23 3M CO., ST PAUL, MN.

ALTERED ITEM DRAWING

301 PART NUMBER	DESCRIPTION	MATERIAL	SPECIFICATION	ITEM
15 M39029/63-368	CONTACTS, SOCKET		MIL-C-39029	21
AR EP21CHT-1(A+B)	ADHESIVE		13	20
AR 2713	THINNER, NAPTHA		24	19
1 MS21043-06	NUT, SELF-LOCKING		MIL-M-25027	18
2 NAS620C6	WASHER, FLAT REDUCE Ø			17
1 17704-H-SS-12	GUIDE PIN		22	16
1 658-25AB	HEAT SINK		21	15
AR 5413	TAPE	POLYMIDE/SILICON	23	14
2 PLTIM-C76	CABLE TIE	TEFZEL	1	13
AR 222	ADHESIVE		4	12
1 PK18-4R-C	TERMINAL LUG		1	11
10" M22759/22-22-0	WIRE, STRANDED, 22AWG	BLACK, TFE SILVER COATED	MIL-W-22759	10
AR 63/37.025P3RELIS	SOLDER		QQ-S-571	9
20" M22759/22-24-0	WIRE, STRANDED, 24AWG	BLACK, TFE SILVER COATED	MIL-W-22759	8
2 205817-1	ASSEMBLY, FEMALE SCREW LOCK		27 15	7
1 205205-2	CONNECTOR/15 SOCKET		26 15	6
AR 3145	ADHESIVE		2	5
AR 3140	CONFORMAL COATING		2	4
AR 73X WHITE	INK, MARKING		3	3
AR 1204	PRIMER		2	2
1 -001	ETHERLINK III PWB	MAKE FROM 3C509B-COMBO	14	1
- -301	ETHERNET BOARD ASSY			

SIGNATURES		DATE
DR	C. NUNEZ	6/2/97
ENG		9/5/97
CH		9/5/97
APP		9/11/97
QE		9/11/97
MATL		9/9/97
STRESS		9/16/97
AUTH		10/1/97

NEXT ASSY: SEG46114983

EQUIP TYPE: ☒ FLT HDWR ☐ OTHER (SPECIFY) ☐ APPLICABLE ESE

CALC WT:

MOD FILE:

DRW FILE: F114.90.dwg

NATIONAL AERONAUTICS & SPACE ADMINISTRATION
LYNDON B. JOHNSON SPACE CENTER HOUSTON, TEXAS

ETHERNET BOARD ASSY, HRF-WS
ALTERED ITEM DRAWING

CODE IDENT NO 21356 | SIZE D | DWG NO SDG46114190
SCALE NONE | EAS 8104 | SHEET 2

517

WIRE DATA LIST

FUNCTION	FROM	PIN	TO	LENGTH	WIRE	NOTES
TRANSMIT +	J1	1	BOARD PIN 1	AR	M22759/22-24-0	
TRANSMIT -		2	BOARD PIN 2			
RECEIVE +		3	BOARD PIN 3			
RECEIVE -		4	BOARD PIN 6		M22759/22-24-0	
TRANSMIT SHD		5	CHASSIS GND		M22759/22-22-0	12
RECEIVE SHD	J1	6	CHASSIS GND	AR	M22759/22-22-0	12

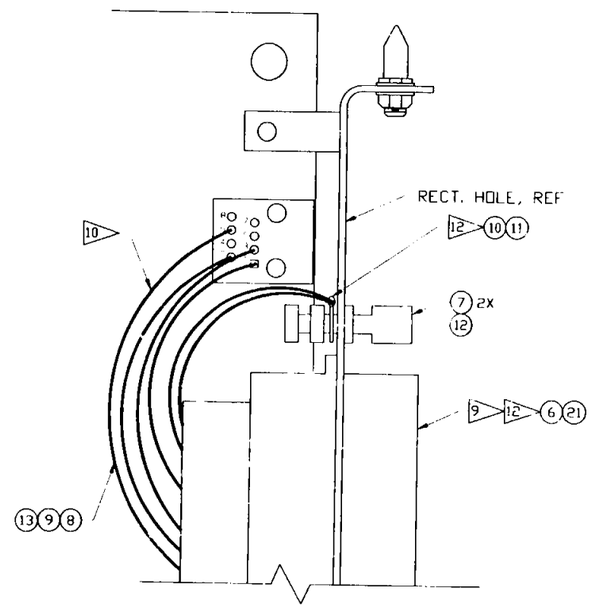

VIEW A

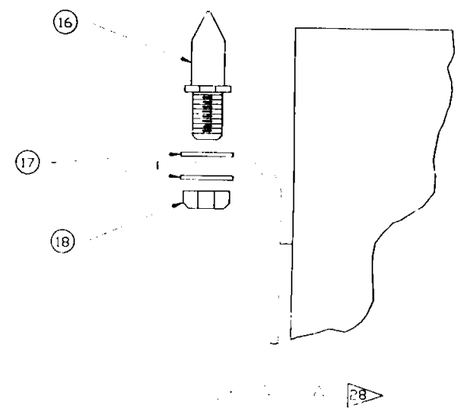

ALTERED ITEM DRAWING

SIGNATURES	DATE
DR C. NUNEZ	6/2/93
ENG	7/8/93
CH	7/8/93
APP	
QE	
MATL	
STRESS	7/12/93
AUTH	

NATIONAL AERONAUTICS & SPACE ADMINISTRATION
LYNDON B. JOHNSON SPACE CENTER HOUSTON, TEXAS

ETHERNET BOARD ASSY, HRF-WS
ALTERED ITEM DRAWING

NEXT ASSY SCG46114983

CALC WT:
MOD FILE:
DRW FILE F114190.dwg

EQUIP TYPE
☒ FLT HDWR
☐ OTHER - SPECIFY
☐ APPLICABLE ESC

CODE IDENT NO 21356 | SIZE D | DWG NO SDG46114190
SCALE NONE | CAS B104 | SHEET 2 OF 2

518

DCN NUMBER			DRAWING CHANGE NOTICE					SHEET 1 OF 1
DRAWING NO. SDG46114190	REV NC	SEQ.# 01	REASON FOR CHANGE	ORIGINATOR P. SALOMON	DATE 5/27/98	QE M. IWASA	DATE 6/4/98	
DRAWING TITLE ETHERNET BOARD ASSY, HRF-WS ALTERED ITEM DRAWING			ENGINEERING CHANGE	ENG B. RUIZ	5/27/98	MATL H. KAO	6/1/98	
				CH R. BULAND	5/27/98	STRESS D. VAN	5/29/98	
PROJECT B104				APP F. BOOKER	6/3/98			
				AUTH		FINAL APP		

ADD FLAG NOTES TO ITEM 1.

-301	PART NUMBER	DESCRIPTION	MATERIAL	SPECIFICATION	ITEM	(IS) (WAS)
1	-001	ETHERLINK III PWB	MAKE FROM 3C509B-COMBO	8 14 7	1	IS
1	-001	ETHERLINK III PWB	MAKE FROM 3C509B-COMBO	14	1	WAS

DWG FILE: 46114190.asc PROJECT: B100/B104 HRF-WS LIBRARY: