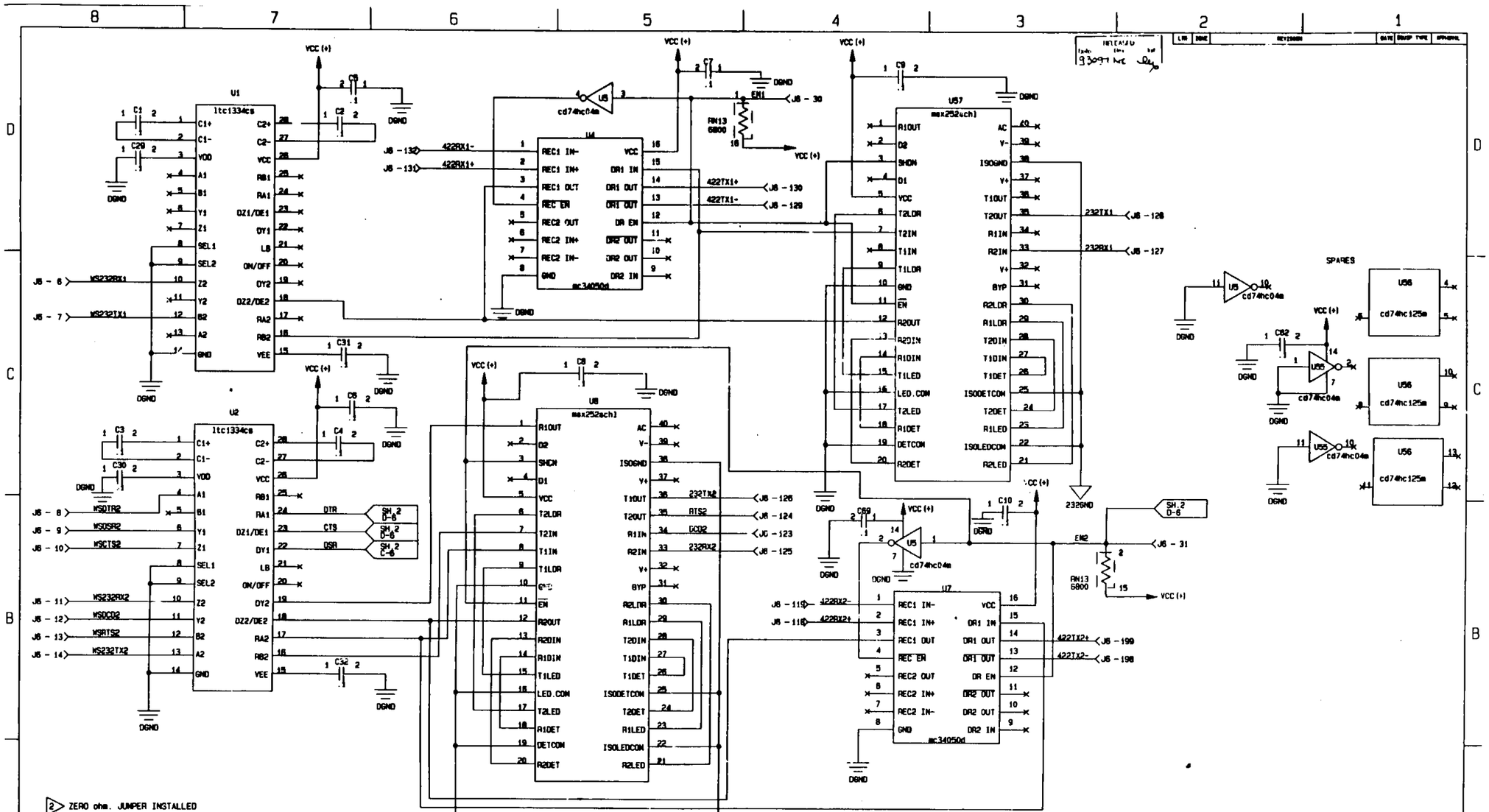

2 ZERO ohm. JUMPER INSTALLED

1 RESISTOR NOT INSTALLED

6. LAST REFERENCE DESIGNATOR USED: C82, U59, RN13, R15, CR1, J6
5. REFERENCE DESIGNATORS NOT USED: C13, C14, C16, C17, C22, C25, C36 C38-C41, C43, C44, C46, C47, C50-C53, C55-C57, C59, C60, C64, C72, C73 U8, U9, U11, U22, U23, U27, U28, U30, U32, U33, U35, U37, U38, U40 RN6-RN9, RN11, RN12, R1, R4-R7, J1-J5
4. THIS SCHEMATIC USED IN CONJUNCTION WITH SED46113976-301.
3. CAPACITOR VALUES ARE IN MICRO FARADS.
2. RESISTOR VALUES ARE IN OHMS, 1/4 WATT, 1%.
1. INTERPRET DRAWING PER JSCM 8500

NOTES: UNLESS OTHERWISE SPECIFIED

SIGNATURES		DATE
DR	Z. PALMER	07/01/96
CHK	[illegible]	9/16/97
APPR	[illegible]	9/16/97
QA	[illegible]	9/16/97
MAIL	[illegible]	9/16/97
STRESS	[illegible]	9/16/97
AUTH	[illegible]	9/16/97

NATIONAL AERONAUTICS & SPACE ADMINISTRATION
LYNDON B. JOHNSON SPACE CENTER HOUSTON, TEXAS

PRINTED WIRING DIAGRAM
DIGITAL
VEG

CODE IDENT NO.	SIZE	DWG NO.	REV
21356	D	SIG46114185	

SCALE NONE | EAS PROJECT: J104 | SHEET 1 OF 7

SEG46113976

\PCAD\RELEASE\SCH
4185SH1.HP

046

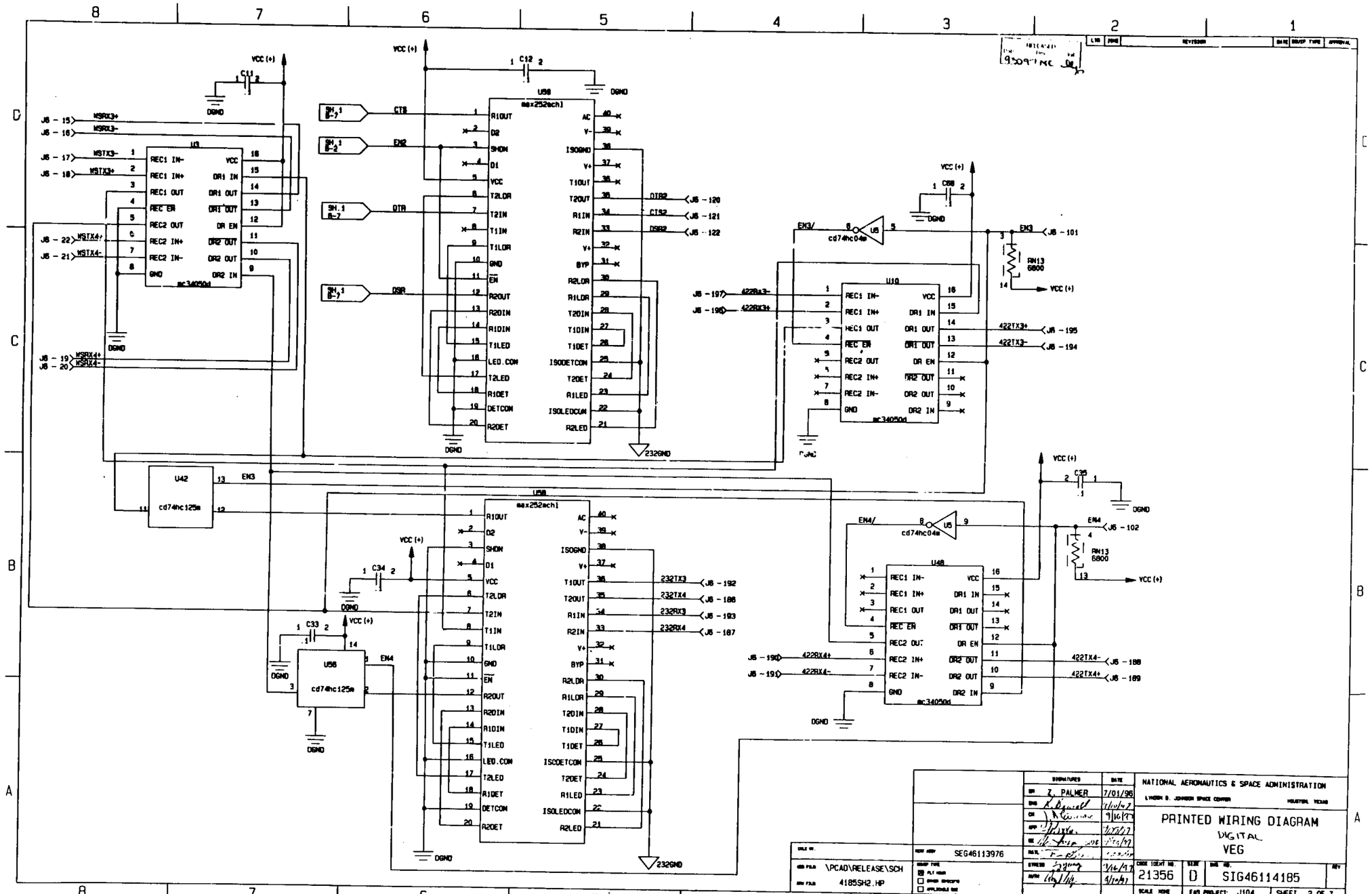

DR	Z. PALMER	7/01/96
ENG	[signature]	7/10/97
CH	[signature]	9/16/97
APP	[signature]	9/17/97
QE	[signature]	9/17/97
RAIL	[signature]	[illegible]
STRESS	[signature]	9/16/97
MATH	[signature]	9/10/97

NATIONAL AERONAUTICS & SPACE ADMINISTRATION
LYNDON B. JOHNSON SPACE CENTER — HOUSTON, TEXAS

PRINTED WIRING DIAGRAM
DIGITAL
VEG

CODE IDENT NO.	SIZE	DWG NO.	REV
21356	D	SIG46114185	

SCALE NONE — EAS PROJECT: J104 — SHEET 2 OF 7

NEW ASSY: SEG46113976

\PCAD\RELEASE\SCH
4185SH2.HP

047

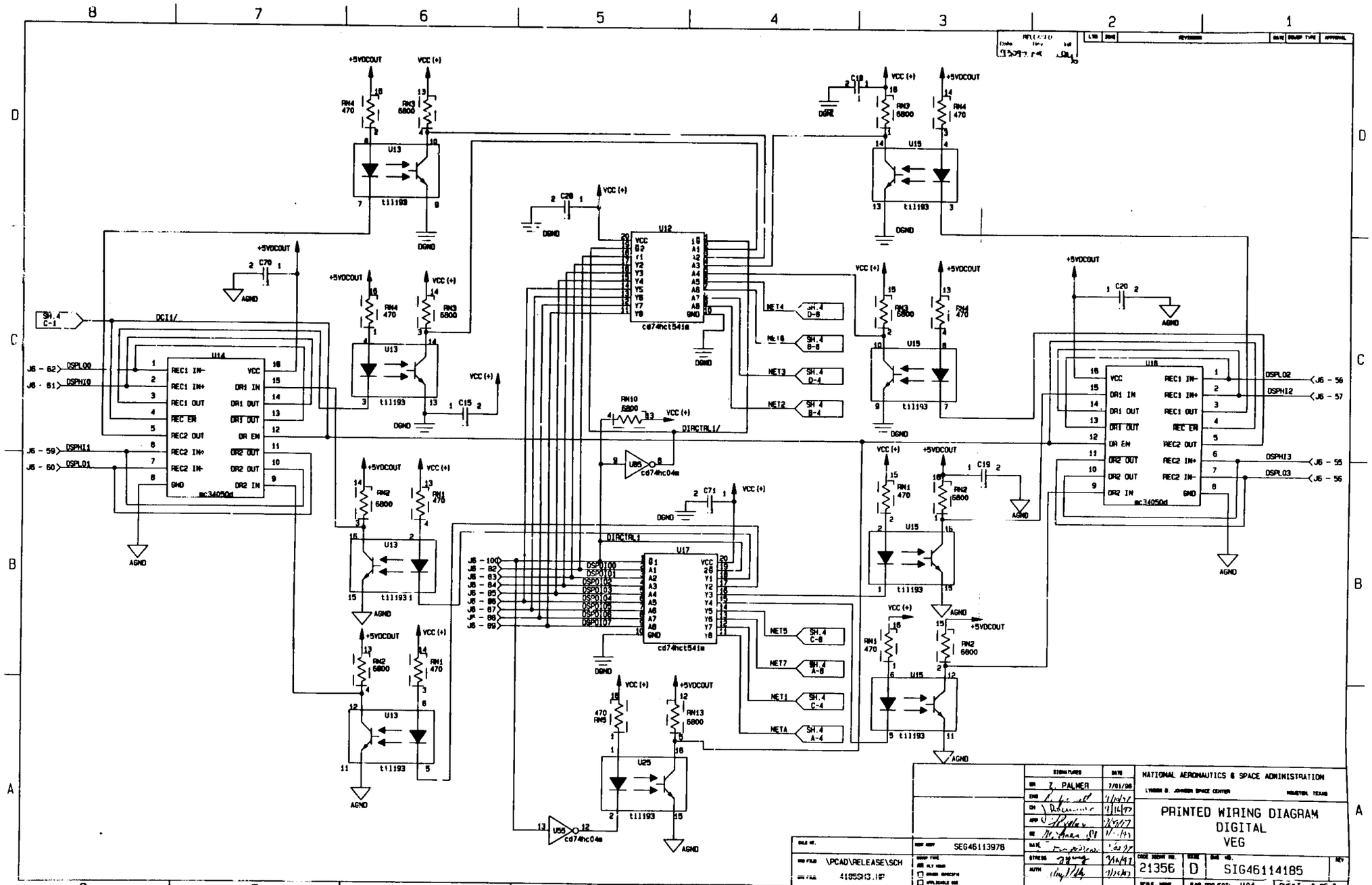

U12
cd74hct541m
U17
cd74hct541m
U14
mc34050d
U16
mc34050d
U13
U15
U25
U55
U85
cd74hc04m
DCI1/
DIRCTRL1/
DIRCTRL1
+5VDCOUT
VCC (+)
AGND
DGND
DSPL00
DSPHI0
DSPHI1
DSPL01
DSPL02
DSPHI2
DSPHI3
DSPL03
NET4
NET6
NET3
NET2
NET5
NET7
NET1
NETA
SH.4 C-1
SH.4 D-8
SH.4 B-8
SH.4 D-4
SH.4 B-4
SH.4 C-8
SH.4 A-8
SH.4 C-4
SH.4 A-4
RN10 6800
RN13 6800
RN4 470
RN3 6800
RN2 6800
RN1 470
RN5 470
C70 .1
C15 .1
C20 .1
C19 .1
C71 .1
C28 .1
C18 .1
C19 .1
J6 - 62
J6 - 61
J6 - 59
J6 - 60
J6 - 56
J6 - 57
J6 - 55
J6 - 56
J6 - 100
J6 - 82
J6 - 83
J6 - 84
J6 - 85
J6 - 86
J6 - 87
J6 - 88
J6 - 89
NATIONAL AERONAUTICS & SPACE ADMINISTRATION
LYNDON B. JOHNSON SPACE CENTER
HOUSTON, TEXAS
PRINTED WIRING DIAGRAM
DIGITAL
VEG
Z. PALMER
7/01/98
SEG46113976
\PCAD\RELEASE\SCH
4185SH3.HP
21356
D
SIG46114185
EAS PROJECT: J104
SHEET 3 OF 7

048

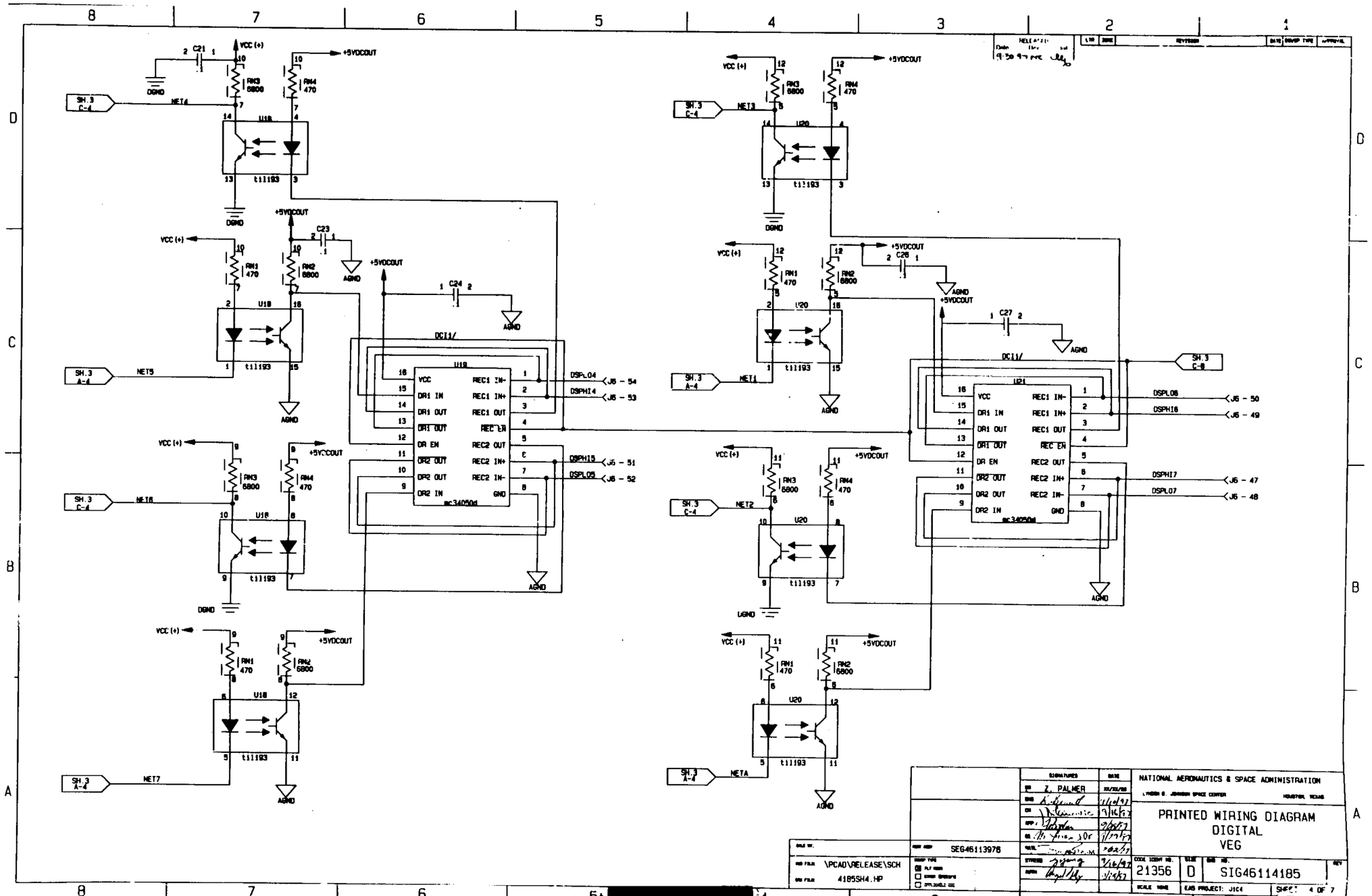

NATIONAL AERONAUTICS & SPACE ADMINISTRATION
LYNDON B. JOHNSON SPACE CENTER
HOUSTON, TEXAS
PRINTED WIRING DIAGRAM
DIGITAL
VEG
Z. PALMER
SEG46113976
\PCAD\RELEASE\SCH
4185SH4.HP
21356
D
SIG46114185
EAS PROJECT: J1C4
SHEET 4 OF 7

049

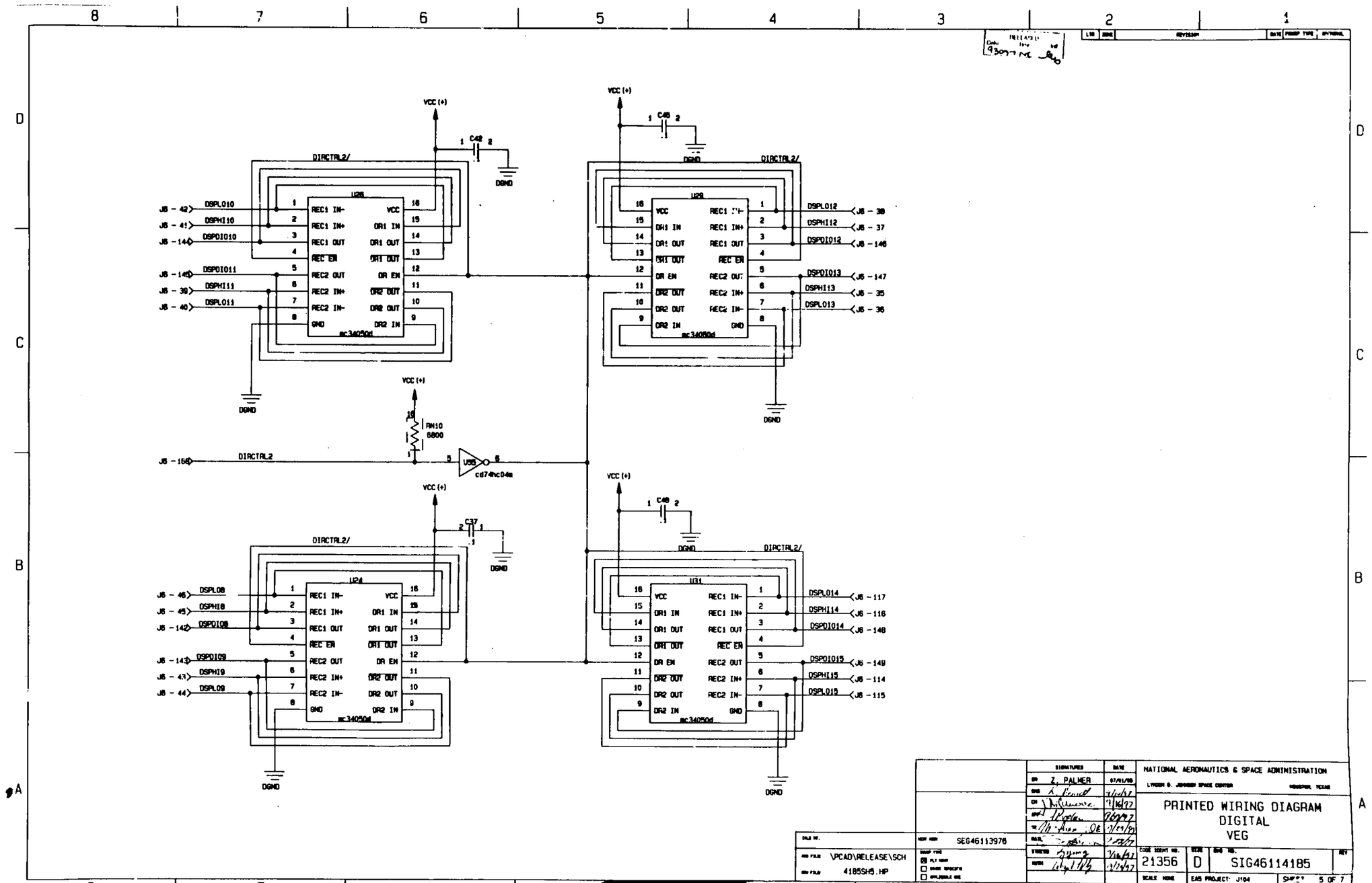

SIGNATURES	DATE	NATIONAL AERONAUTICS & SPACE ADMINISTRATION	
DR Z. PALMER	07/01/93	LYNDON B. JOHNSON SPACE CENTER HOUSTON, TEXAS	
ENG K. Fennell	7/16/93	PRINTED WIRING DIAGRAM	
CH J. Williams	7/16/93	DIGITAL	
APP J. Ryder	7/16/93	VEG	
TE Alan Oe	7/19/93		
QA	7/22/93		
STRESS	7/16/93		
MATRL	7/22/93		

DWG FILE: \PCAD\RELEASE\SCH	SEG46113976	CODE IDENT NO. 21356	SIZE D / SIG46114185 / REV
DWG FILE: 4185SH5.HP		SCALE NONE	EAS PROJECT: J104 / SHEET 5 OF 7

050

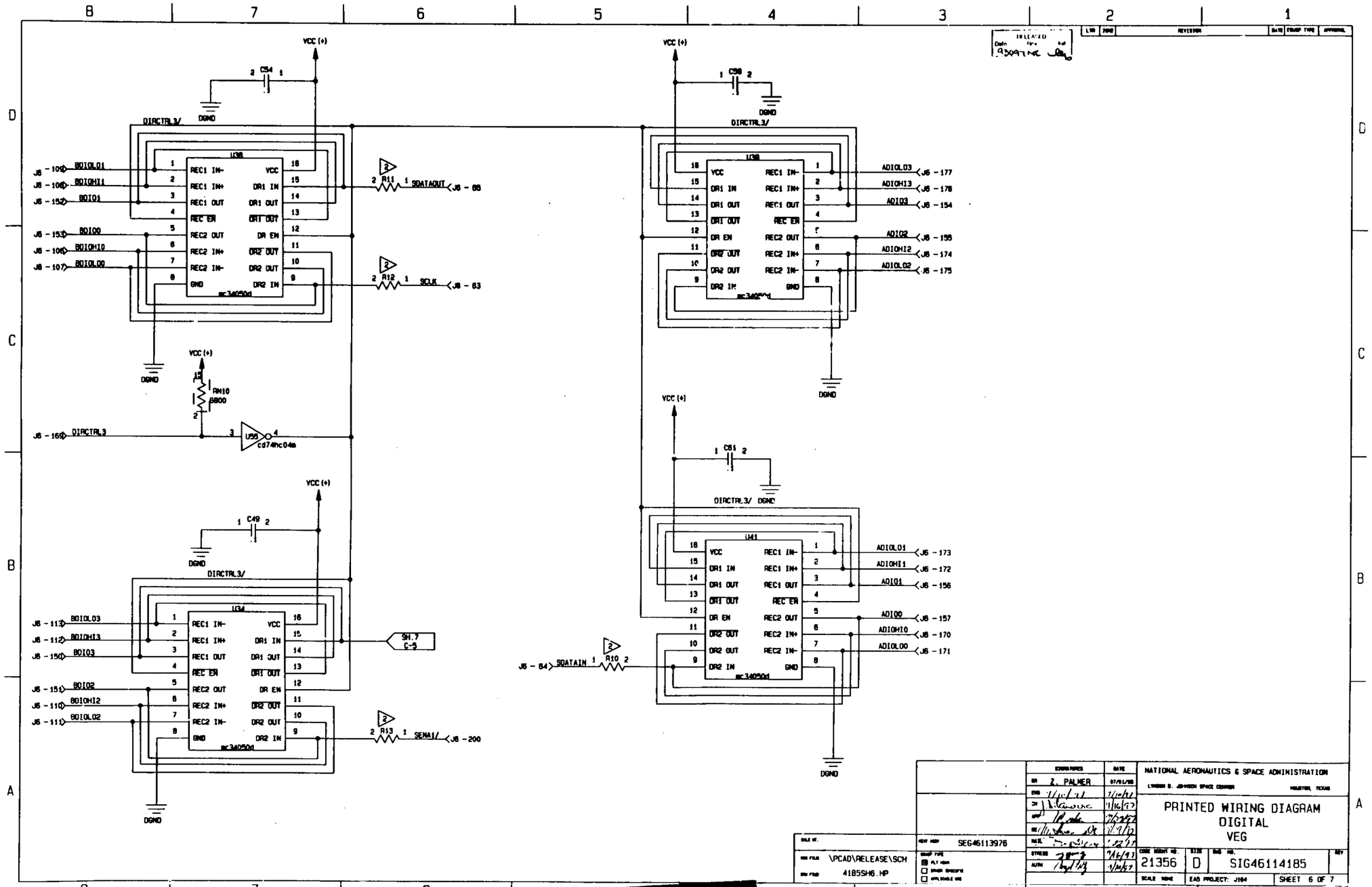

DR	Z. PALMER	07/01/93	NATIONAL AERONAUTICS & SPACE ADMINISTRATION
ENG		7/10/93	LYNDON B. JOHNSON SPACE CENTER — HOUSTON, TEXAS
CH		7/16/93	PRINTED WIRING DIAGRAM
		7/20/93	DIGITAL
		7/27/93	VEG
MAIL		7/27/93	
STRESS		7/16/93	CODE IDENT NO. 21356 — SIZE D — DWG NO. SIG46114185 — REV
AUTH		7/16/93	SCALE NONE — EAS PROJECT: J104 — SHEET 6 OF 7

NEXT ASSY: SEG46113976

DWG FILE: \PCAD\RELEASE\SCH

DWG FILE: 4185SH6.HP

051

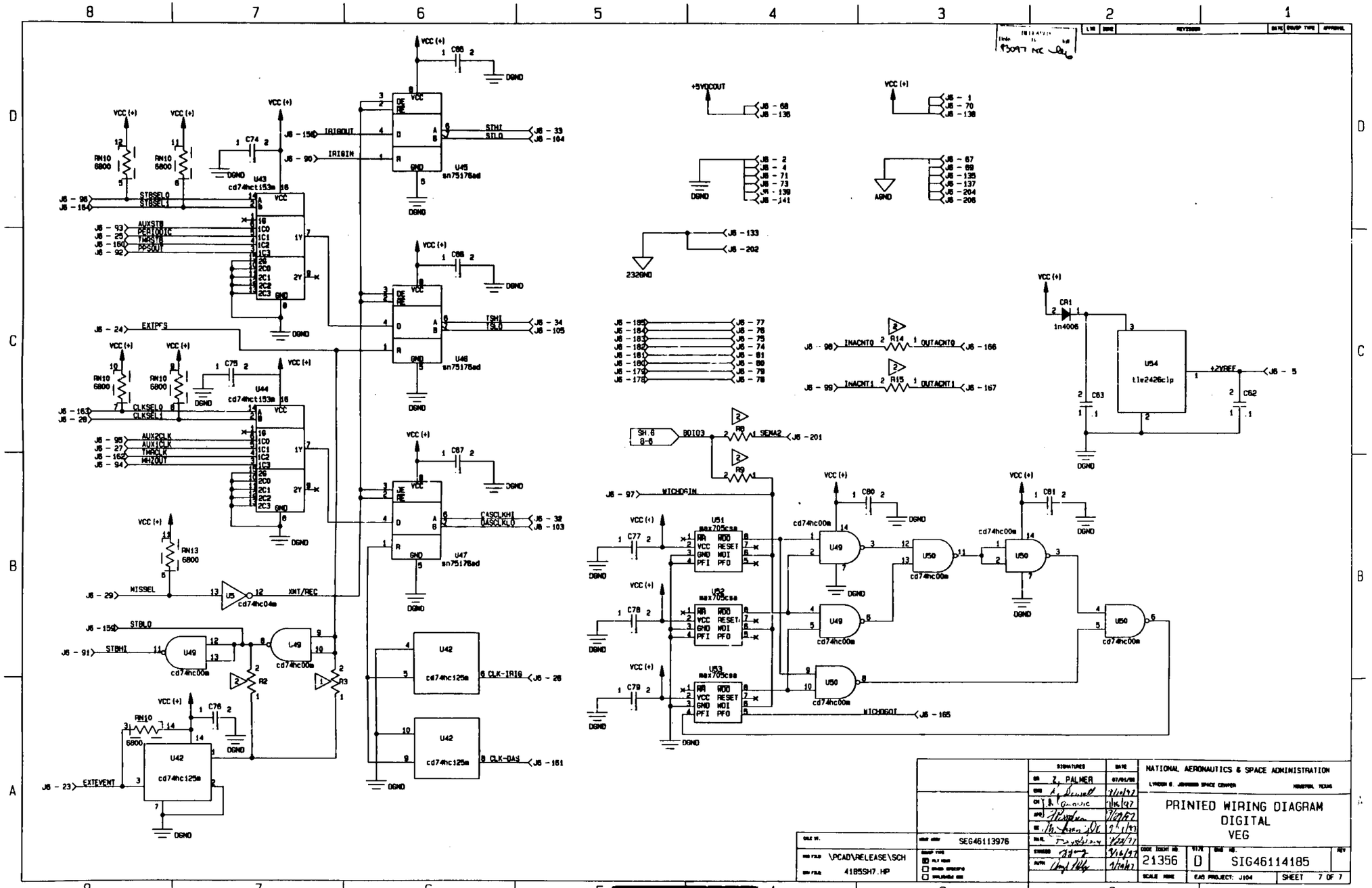
NATIONAL AERONAUTICS & SPACE ADMINISTRATION
PRINTED WIRING DIAGRAM
DIGITAL
VEG
21356
D
SIG46114185
SEG46113976
\PCAD\RELEASE\SCH
4185SH7.HP
SHEET 7 OF 7