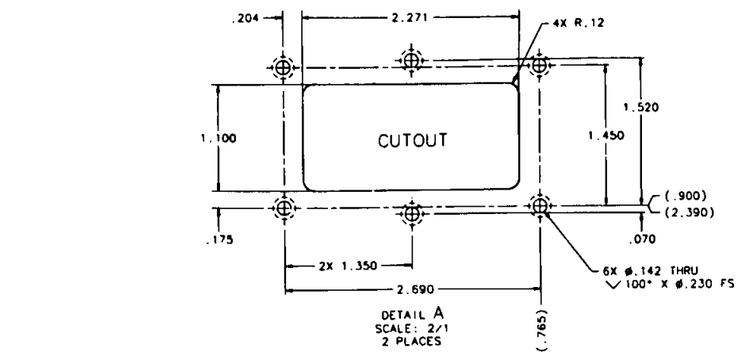

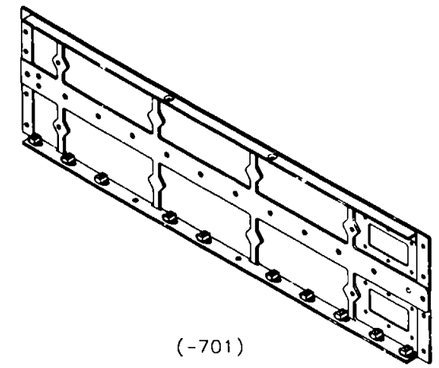

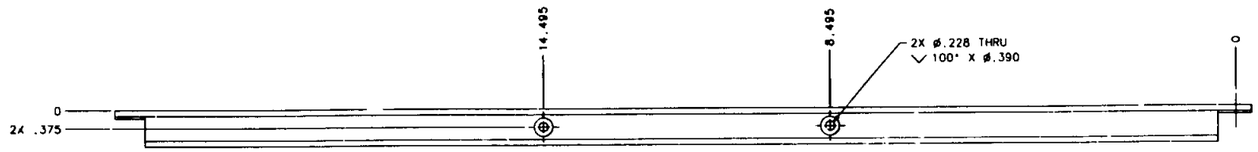

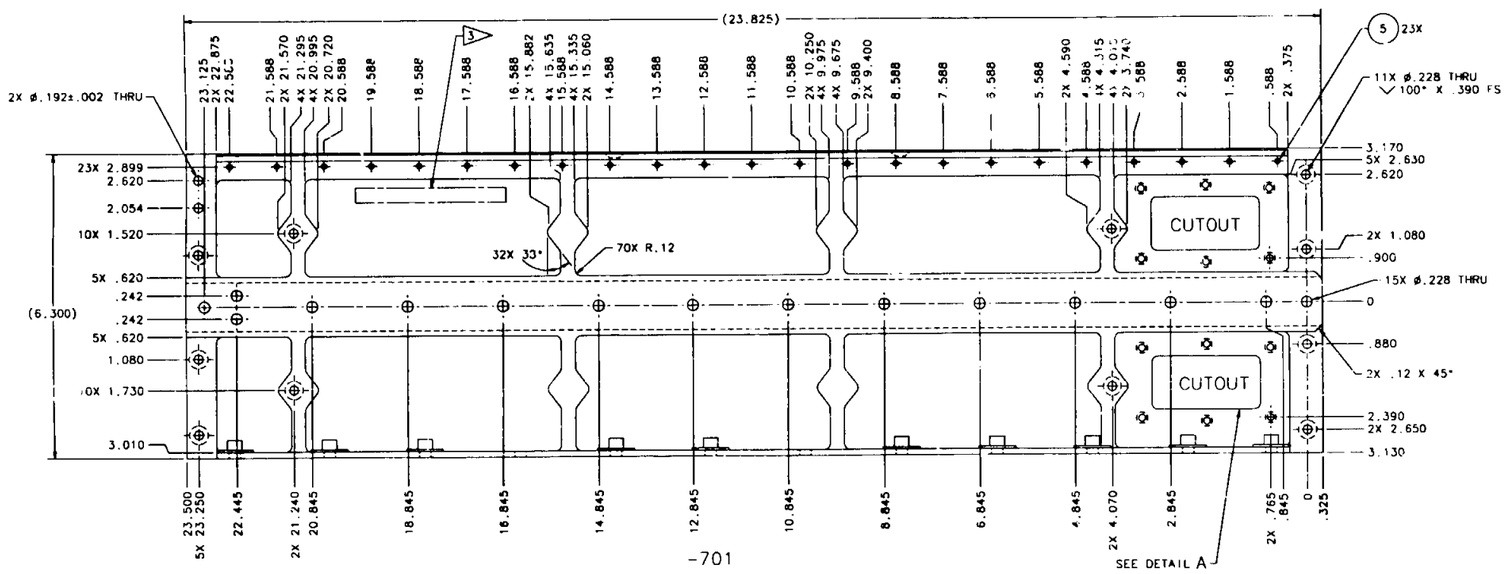

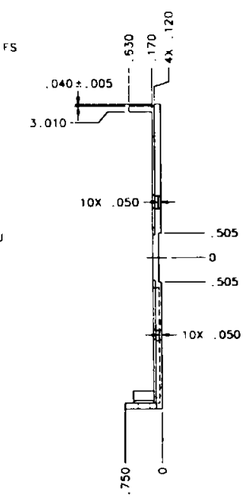

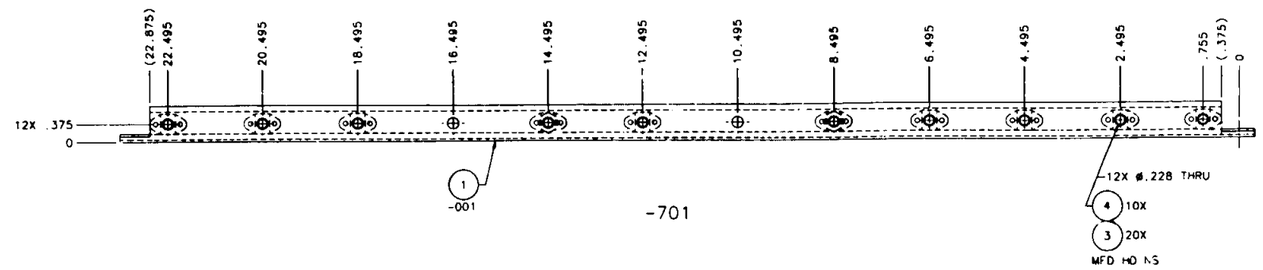

AR	73X, BLACK	INK, MARKING		2	6
23	MS21209C0410L	INSERT, SLF LKG	CRES 112-40UNC-3B X .112L		5
10	NAS1779RC3M	NUT PLATE	CRES A286 .190-32UNJF-3B		4
20	MS20426AD3-7	RIVET, SOLID CSK 100°	2117-T4 AL ALY ø3/32 X .44L		3
					2
1	-001	SIDE, RH	7075-T7351 AL ALY 1.0 X 6.3 X 24.0	QQ-A-250/12 1	1
-	-701	SIDE ASSY, RH			
701	PART NUMBER	DESCRIPTION	MATERIAL	SPECIFICATION	ITEM

3. PERMANENT INK MARK PN IN .12 HIGH CHARACTERS WITH 73X (BLACK) MARKING INK PER JSC-SPEC-M-1, PARA 3.7.8.
2. INDEPENDENT INK INC. GARDENA, CA.
1. APPLY CHEMICAL FILM PER MIL-C-5541, CLASS 3.

NOTES:

7. INSTALL INSERTS PER MS33537.
6. INSTALL RIVETS PER MIL-STD-403, PARA 4.5.1.1 DOES NOT APPLY.
5. CLEANLINESS REQUIREMENTS PER SN-C-0005 LEVEL GC.
4. THIS ASSEMBLY CONTAINS NO FRACTURE CRITICAL ELEMENTS.
3. ALL DIMENSIONS ARE IN INCHES.
2. FABRICATION TOLERANCES AND PRACTICES PER SKZJ6103755.
1. INTERPRET PER JSCM 8500.

NOTES: UNLESS OTHERWISE SPECIFIED.

DIMENSIONAL TOLERANCE UNLESS NOTED OTHERWISE: 0 ± .1; .00 ± .03; .000 ± .010; ANGULAR ± 1°

SURFACE FINISH IN MICROINCHES RMS UNLESS NOTED OTHERWISE 125

NEXT ASSY SEG46114980

SIGNATURES / DATE: DR J. ADAMS 5/1/96; ENG 5/1/97; LR 5/1/97; APP 5/1/97; ICE 5/1/97; MATL 5/1/97; STRESS 5/1/97; AUTH 5/1/97

NATIONAL AERONAUTICS & SPACE ADMINISTRATION
LYNDON B. JOHNSON SPACE CENTER HOUSTON, TEXAS

PANEL, RIGHT SIDE
HRF

CODE IDENT NO 21356 | SIZE E | DWG NO SDG46114180

SCALE 1/1 | EAS PROJECT: J104 | SHEET 1 OF 1

CALC WT:
PROJECT: J104-HRF
LIBRARY: DRAWCR
DRW FILE: 46114160.dwg
EQUIP TYPE: FLT HDWR; OTHER (SPECIFY); APPLICABLE SOC

0501