LTR	ZONE	REVISION	DATE	EQUIP TYPE	APPROVAL

RELEASED
Date Inv ea
9 3 97 MC

16 TWO WIRES ARE SPLICED INTO EACH PIN OF P1 (ITEM 2).

15 USE 7B9720613 GSE SLIME (ITEM 14) AS A GUIDE WHEN WIRING CONNCTORS P1, P2 AND P3. SEE DETAILS A AND B. FANS ARE MOUNTED WITH WIRES NEXT TO HOUSING.

14 INDEPENDENT INK INC., GARDENA, CA.

13 PANDUIT CORP., TINLEY PARK, IL.

12 AIRBORN CONNECTORS, ADDISON, TX.

11 3M CO., ST. PAUL, MN.

10 BRADY CO., MILWAUKEE, WI.

9 PERMANENT INK MARK "F4" IN .125 HIGH CHARACTERS WITH WHITE MARKING INK (ITEM 13) PER JSC-SPEC-M-1, PARA 3.7.8. APPROXIMATELY AS SHOWN.

8 PERMANENT INK MARK "F3" IN .125 HIGH CHARACTERS WITH WHITE MARKING INK (ITEM 13) PER JSC-SPEC-M-1, PARA 3.7.8. APPROXIMATELY AS SHOWN.

7 PERMANENT INK MARK "F2" IN .125 HIGH CHARACTERS WITH WHITE MARKING INK (ITEM 13) PER JSC-SPEC-M-1, PARA 3.7.8. APPROXIMATELY AS SHOWN.

6 PERMANENT INK MARK "F1" IN .125 HIGH CHARACTERS WITH WHITE MARKING INK (ITEM 13) PER JSC-SPEC-M-1, PARA 3.7.8. APPROXIMATELY AS SHOWN.

5 PERMANENT INK MARK "P3" IN .125 HIGH CHARACTERS WITH BLACK MARKING INK (ITEM 13) PER JSC-SPEC-M-1, PARA 3.7.8.

4 PERMANENT INK MARK "P2" IN .125 HIGH CHARACTERS WITH BLACK MARKING INK (ITEM 13) PER JSC-SPEC-M-1, PARA 3.7.8.

3 PERMANENT INK MARK "P1" IN .125 HIGH CHARACTERS WITH BLACK MARKING INK (ITEM 13) PER JSC-SPEC-M-1, PARA 3.7.8.

2 MARK LABEL "SEG46113977-301".

1 TYPE LABEL IDENTIFICATION AS SHOW USING BRADY MARKER XC PC PLUS PRINTER & (ITEM 8) ROLL FILM FOR CABLE MARKING. AT THE DESIRED LOCATION, WRAP 2-3 TIMES WITH (ITEM 10) GLASS CLOTH TAPE. PLACE (ITEM 8) ROLL FILM ON (ITEM 10) GLASS CLOTH TAPE WITH MARKING SHOWING AND WRAP TWICE WITH (ITEM 9) CLEAR TAPE. CUT OFF ANY EXCESS MATERIAL.

NOTES:

6. SOLDER PER NAS 5300.4 (3A-2).
5. THIS WIRING CONTAINS NO FRACTURE CRITICAL ELEMENTS.
4. CLEANLINESS REQUIREMENTS PER SN-C-0005 GC LEVEL.
3. FABRICATE AND TEST IN ACCORDANCE WITH LS 6-0035
2. ALL DIMENSIONS ARE IN INCHES. TOL. IS +1.0° - 0.0°.
1. INTERPRET PER JSCM 8500.

NOTES: UNLESS OTHERWISE SPECIFIED

-301 PART NUMBER	DESCRIPTION	MATERIAL	SPECIFICATION	ITEM
REF 7B9720613	GSE SLIME			14
AR 73X	INK, MARKING	BLACK	14	13
2FT M22759/22-26-2	WIRE, STRANDED	26 AWG TFE TEFLON	MIL-W-22759	12
AR 73X	INK, MARKING	WHITE	14	11
AR 361-1	TAPE, GLASS CLOTH		11	10
AR 800-1 1/2	TAPE, CLEAR		11	9
AR WRCM-717-637W	MARKER, CABLE	TEDLAR ROLL FILM	10	8
AR PLT1M-C76	CABLE TIE	TEFZEL	13	7
2FT M22759/22-26-0	WIRE, STRANDED	26 AWG TFE TEFLON	MIL-W-22759	6
AR M23053/8-002-C	TUBING, HEAT SHRINK		MIL-I-23053	5
AR 63/37.025P3DREL15	SOLDER		QQ-S-571	4
2 WTB14SACJ	CONNECTOR, 14 PIN		12	3
1 WTB20PCJ	CONNECTOR, 20 PIN		12	2
4 SDG46115191-701	FAN ASSY			1
- -301	WIRING INTERNAL FAN			

DIMENSIONAL TOLERANCE UNLESS NOTED OTHERWISE
0 1 DEC ± .010
00 ± .03 ANGULAR ± 0
SURFACE FINISH IN MICROINCHES UNLESS NOTED OTHERWISE
NEXT ASSY SEG46114187

SIGNATURES	DATE
DR D. SCYPION	1/15/97
ENG	1/15/97
CH	1/21/97
APR	1/21/97
QE	1/21/97
MATL	1/21/97
STRESS	1/21/97
AUTH	1/21/97

NATIONAL AERONAUTICS & SPACE ADMINISTRATION
LYNDON B. JOHNSON SPACE CENTER HOUSTON, TEXAS

SLIME
INTERNAL FAN
WIRING - A5W1

CODE IDENT NO. 21356 | SIZE D | DWG NO. SEG46113977
SCALE NONE | EAS J104 | SHEET 1 OF 3

CALC WT:
MOD FILE:
DRV FILE: F113977.dwg
EQUIP TYPE
☒ FLT HDWR
☐ OTHER (SPECIFY)
☐ APPLICABLE GSE

032

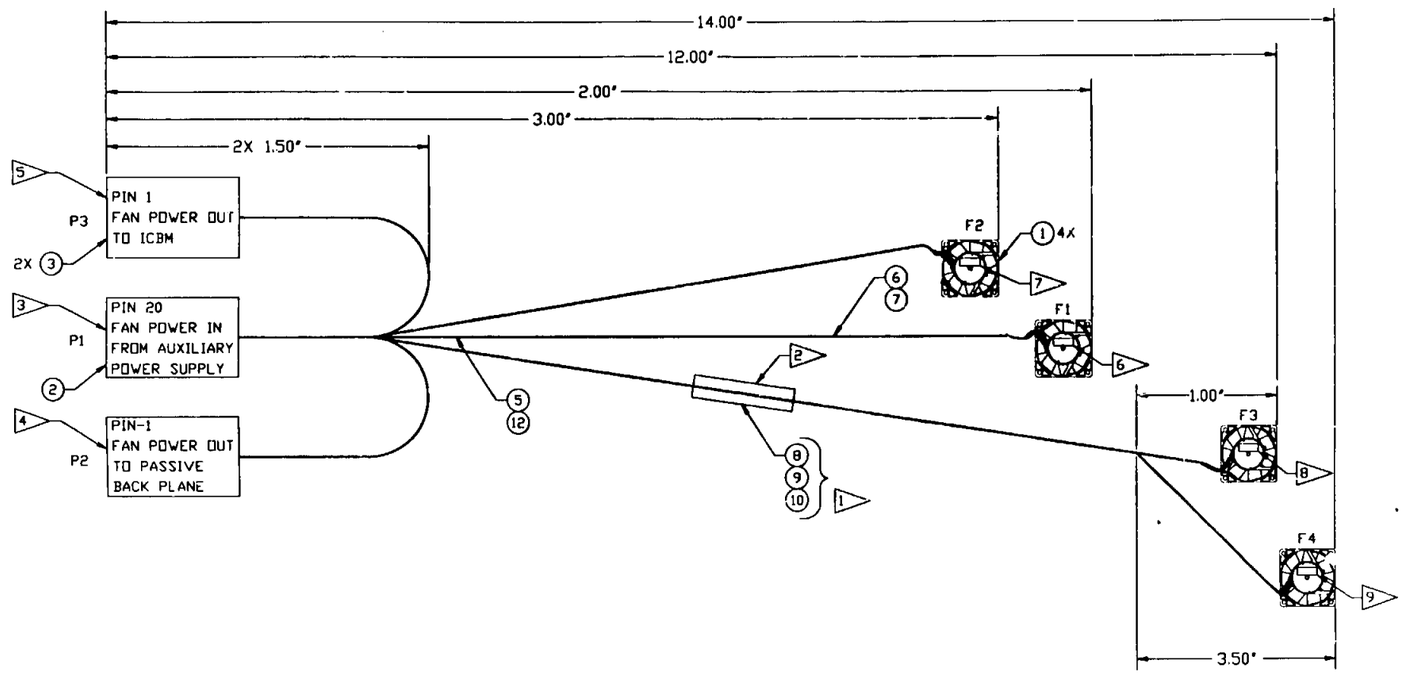

SIGNATURES	DATE
DR D. SCYPION	1/15/97
ENG	1/15/97
CH	1/22/97
APR	1/24/97
QE	1/28/97
MATL	1/29/97
STRESS	1/29/97
AUTH	1/29/97

DIMENSIONAL TOLERANCE UNLESS NOTED OTHERWISE
SURFACE FINISH IN MICROINCHES UNLESS NOTED OTHERWISE
NEXT ASSY SEG46113977

CALC WT:
MOD FILE:
DRW FILE: F113977.dwg

EQUIP TYPE
☒ FLT HDWR
☐ OTHER (SPECIFY)
☐ APPLICABLE SSE

NATIONAL AERONAUTICS & SPACE ADMINISTRATION
LYNDON B. JOHNSON SPACE CENTER HOUSTON, TEXAS

SLIME
INTERNAL FAN
WIRING - A5W1

CODE IDENT NO. 21356 | SIZE D | DWG NO. SEG46113977
SCALE NONE | EAS J104 | SHEET 2 OF 3

033

LTR	ZONE	REVISION	DATE	EQUIP TYPE	APPROVAL

WIRING DATA LIST

SET	FUNTION	FROM	PIN NO.	TO	PIN NO.	WIRE	LENGTH	NOTES
	+12VDC OUT	P1	1	P2	1	M22759/22-26-2	3"	
	+12 RETURN		2	P2	2	M22759/22-26-0		
	-12VDC OUT		3	P2	3	M22759/22-26-0		
	-12 RETURN		4	P2	4	M22759/22-26-2		
	+12VDC OUT		1	P2	5	M22759/22-26-2		
	+12 RETURN		2	P2	6	M22759/22-26-0		
	-12VDC OUT		3	P2	7	M22759/22-26-0		
	-12 RETURN		4	P2	8	M22759/22-26-2		
	+12VDC OUT		5	P3	1	M22759/22-26-2		
	+12 RETURN		6	P3	2	M22759/22-26-0		
	-12VDC OUT		7	P3	3	M22759/22-26-0		16
	-12 RETURN		8	P3	4	M22759/22-26-2		
	+12VDC OUT		5	P3	5	M22759/22-26-2		
	+12 RETURN		6	P3	6	M22759/22-26-0		
	-12VDC OUT		7	P3	7	M22759/22-26-0		
	-12 RETURN		8	P3	8	M22759/22-26-2	3"	
	+12VDC OUT		9	FAN 1	1	M22759/22-26-2	2"	
	+12 RETURN		10	FAN 1	2	M22759/22-26-0	2"	
	-12VDC OUT		11	FAN 2	2	M22759/22-26-0	3"	
	-12 RETURN		12	FAN 2	1	M22759/22-26-2	3"	
	+12VDC OUT		9	FAN 3	1	M22759/22-26-2	12"	
	+12 RETURN		10	FAN 3	2	M22759/22-26-0	12"	
	-12VDC OUT		11	FAN 4	2	M22759/22-26-0	14"	
	-12 RETURN	P1	12	FAN 4	1	M22759/22-26-2	14"	

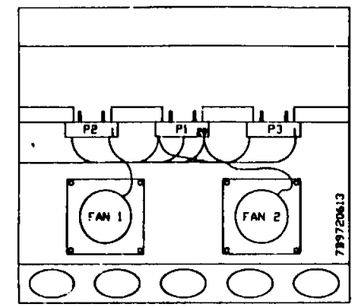

DETAIL A 15

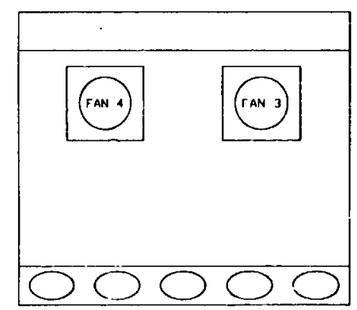

DETAIL B 15

DIMENSIONAL TOLERANCE UNLESS NOTED OTHERWISE
.0 ± .1 .000 ± .010
.00 ± .03 ANGULAR ± 0
SURFACE FINISH IN MICROINCHES RMS UNLESS NOTED OTHERWISE ✓
NEXT ASSY SEG46114187

SIGNATURES	DATE
DR D. SCYPION	1/15/97
ENG	1/5/97
CH	1/2/97
APP	1/24/97
DE	1/16/97
MATL	1/16/97
STRESS	1/9/97
AUTH	1/24/97

NATIONAL AERONAUTICS & SPACE ADMINISTRATION
LYNDON B. JOHNSON SPACE CENTER HOUSTON, TEXAS

SLIME
INTERNAL FAN
WIRING - A5W1

CODE IDENT NO. 21356 | SIZE D | DWG NO. SEG46113977
SCALE NONE | EAS J104 | SHEET 3 OF 3

CALC WT:
HOB FILE:
DRW FILE: F113977.dwg

EQUIP TYPE
☒ FLT HDWR
☐ OTHER (SPECIFY)
☐ APPLICABLE GSE

034

DRAWING CHANGE NOTICE

SHEET 1 OF 1

DCN NUMBER		
DRAWING NO.	REV	SEQ.#
SEG46113977	NC	01

DRAWING TITLE

SLIME
INTERNAL FAN
WIRING - A5W1

PROJECT

B104

REASON FOR CHANGE

TO CORRECT
DRAFTING ERROR.

ORIGINATOR FRANK M. ORTIZ	DATE 2/1/99	QE R. SENEGAL	DATE 2/17/99
ENG BRANDON RUIZ	2/8/99	MATL H. KAO	2/20/99
CH HERMANN LUDL	2/5/99	STRESS D. VAN	2/23/99
APP C. CHAMBELLAN	2/18/99		
AUTH		FINAL APP	

CHANGE FLAG NOTES 6 THRU 9 AS FOLLOWS:

"WAS"

..... MARKING INK (ITEM 13) PER .....

"IS"

..... MARKING INK (ITEM 11) PER .....

DWG FILE: 46113977NC01 PROJECT: B104 - WORKSTATION LIBRARY: DCNs