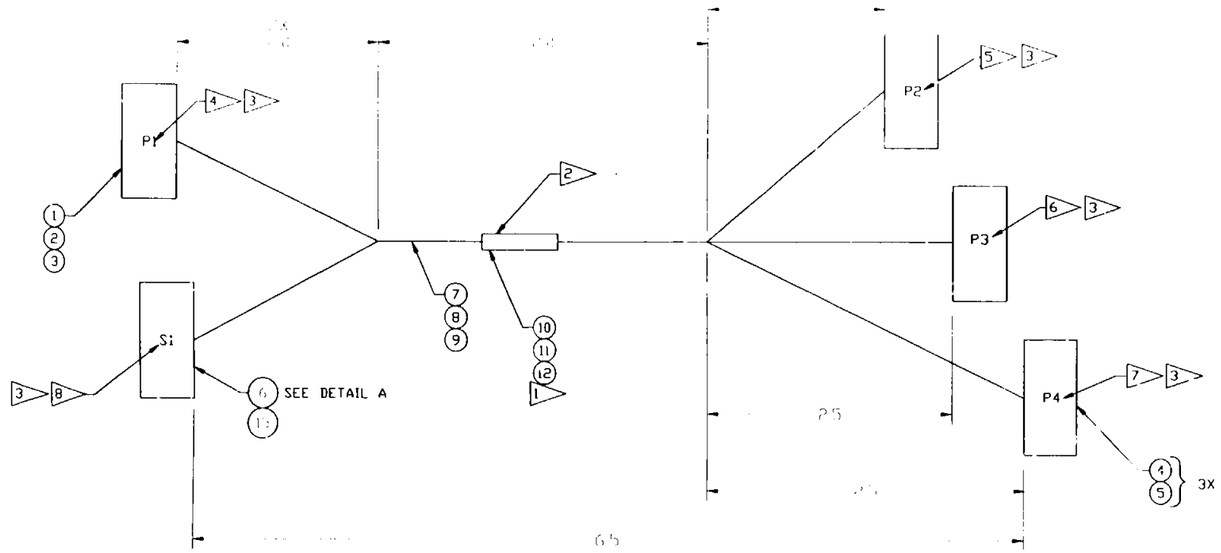

22 REMOVE TAB FROM ITEM 4. SEE DETAIL D.
21 DIGIKEY PART NUMBER A9008-ND IS EQUIVALENT.
20 TWIST THESE TWO WIRES TOGETHER.
19 THREE WIRES ARE SPLICED INTO THIS PIN, SEE DETAIL B.
18 TWO WIRES ARE SPLICED INTO THIS PIN, SEE DETAIL C.
17 HONEYWELL-MICROSWITCH, FREEPORT, IL.
16 RAYCHEM CORP, MENLO PARK, CA.
15 AMP CORP., HARRISBURG, PA.
14 DIGIKEY PART NUMBER A1030-ND IS EQUIVALENT.
13 PANDUIT CORP., TINLEY PARK, IL.
12 MOLEX, LISLE, IL.
11 3M CO., ST. PAUL, MN.
10 BRADY CO., MILWAUKEE, WI.
9 INDEPENDENT INK INC, GARDENA, CA.
8 MARK "S1".

7. ALL REFERENCED SPECIFICATIONS AND STANDARDS SHALL BE OF THE LATEST REVISION LEVEL OR AS SPECIFIED IN THE PROCUREMENT DOCUMENT. IN THE CASE CONFLICT, THE PROCUREMENT DOCUMENT SHALL TAKE PRECEDENCE.
6. CABLE TOLERANCE IS +1.0, -0.0.
5. THIS ASSEMBLY CONTAINS NO FRACTURE CRITICAL ELEMENTS.
4. CLEANLINESS REQUIREMENTS PER SN-C-0005 GC LEVEL.
3. FABRICATE AND TEST IN ACCORDANCE WITH LS-60035
2. ALL DIMENSIONS ARE IN INCHES.
1. INTERPRET PER EDS MANUAL JPG 8500.4.

NOTES: UNLESS OTHERWISE SPECIFIED

-301 CABLE ASSEMBLY

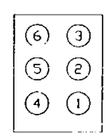

DETAIL A
SWITCH REAR VIEW

7 MARK "P4".
6 MARK "P3".
5 MARK "P2".
4 MARK "P1".
3 PERMANENT INK MARK REF DES IN .125 HIGH CHARACTERS WITH 73X BLACK MARKING INK (ITEM 13) PER JSC-SPEC-M-1, PARA 3.7.8.
2 MARK LABEL "SEG46113973 301 SERNO 10XX".
1 TYPE LABEL IDENTIFICATION AS SHOW USING BRADY MARKER XL PC PLUS PRINTER & (ITEM 10) ROLL FILM FOR CABLE MARKING, AT THE DESIRED LOCATION, WRAP 2-3 TIMES WITH (ITEM 11) GLASS CLOTH TAPE. PLACE (ITEM 12) ROLL FILM ON (ITEM 11) GLASS CLOTH TAPE WITH MARKING SHOWING & WRAP TWICE WITH (ITEM 12) CLEAR TAPE. CUT OFF ANY EXCESS MATERIAL.

NOTES:

2	D144-00	SLEEVE, SOLDER	KYNAR	16	16
1 FT	M23053/8-003-C	SHRINK TUBING 3/32"	KYNAR		15
3	D144-01	SLEEVE, SOLDER	KYNAR	16	14
AR	73X, BLACK	INK, MARKING		9	13
AR	800-1/2	TAPE, CLEAR	ACETATE	11	12
AR	361-1 1/2	GLASS CLOTH TAPE		11	11
AR	WRCM-717 637W	MARKER CABLE	TEDLAR ROLL FILM	10	10
30	PLT1H-C76	TIEWRAP	TEFZEL	13	9
5 FT	M227[illegible]/11-22-0	WIRE, STRANDED, BLK	TFE INSULATED	MIL-W-22759	8
4 FT	M22757/11-22-9	WIRE, STRANDED, WHT	TFE INSULATED	MIL-W-22759	7
1	MS24656-211	SWITCH, TOGGLE		17	6
12	02-08-1202	CONNECTOR - PINS	PHOSPHER BRONZE	12	5
3	15 24-4048	CONNECTOR, 4 PIN	94V-2 NYLON	12	4
9	M39029/64 369	PIN, MALE	ALL OVER COPPER	MIL-C-39029	3
2	205980-1	SCREW, MALE LOCK ASSY	YELLOW CHROMATE OVER ZINC PLATED STAINLESS	15 21	2
1	205204-3	CONECTOR, MALE DSUB	TIN PLATED STEEL	14 15	1
	301	CABLE ASSEMBLY			
301	PART NUMBER	DESCRIPTION	MATERIAL		ITEM

NEXT ASSY SEG46114201

EQUIP TYPE
☒ FLT HDWA
☐ OTHER (SPECIFY)
☐ APPL CABLE USE

SIGNATURES
DR D. SCYPION 1/14/97
ENG
CH
APP
QA
MATL
STRESS
AUTH

NATIONAL AERONAUTICS & SPACE ADMINISTRATION
LYNDON B. JOHNSON SPACE CENTER HOUSTON, TEXAS

ICBM DISK DRIVE
POWER CABLE
NEURULAB

CODE IDENT NO 21356 SIZE D DWG NO SEG46113973
SCALE NONE SHEET 1 OF 2

027

WIRING DATA LISTING

FUNCTION	FROM	PIN NO.	TO	PIN NO.	WIRE	LENGTH INCHES	NOTES	NOTES
C BACKUP DRIVE +12	S1	6	P2	1	M22757/11-22-9	6.5		20
+5 RTN	P1	2	P2	2	M22757/11-22-0	6.5	19	
+12V RTN	P1	3	P2	3	M22759/11-22-0	6.5	19	20
C BACKUP DRIVE +5	S1	3	P2	4	M22757/11-22-9	6.5		
C DRIVE +12	S1	4	P3	1	M22757/11-22-9	6.5	18	20
+5 RTN	P1	2	P3	2	M22757/11-22-0	6.5	19	
+12V RTN	P1	3	P3	3	M22757/11-22-0	6.5	19	20
C DRIVE +5	S1	1	P3	4	M22757/11-22-9	6.5	18	
D DRIVE +12	S1	4	P4	1	M22757/11-22-9	6.5	18	20
+5 RTN	P1	2	P4	2	M22757/11-22-0	6.5	19	
+12V RTN	P1	3	P4	3	M22757/11-22-0	6.5	19	20
D DRIVE +5	S1	1	P4	4	M22757/11-22-9	6.5	18	
+5VDC	P1	1	S1	5	M22757/11-22-9	4		
+12VDC	P1	4	S1	2	M22757/11-22-9	4		

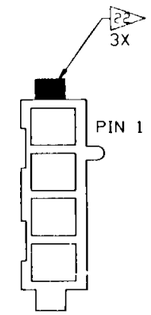

ITEM 4
REAR VIEW

DETAIL D

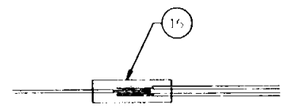

DETAIL C

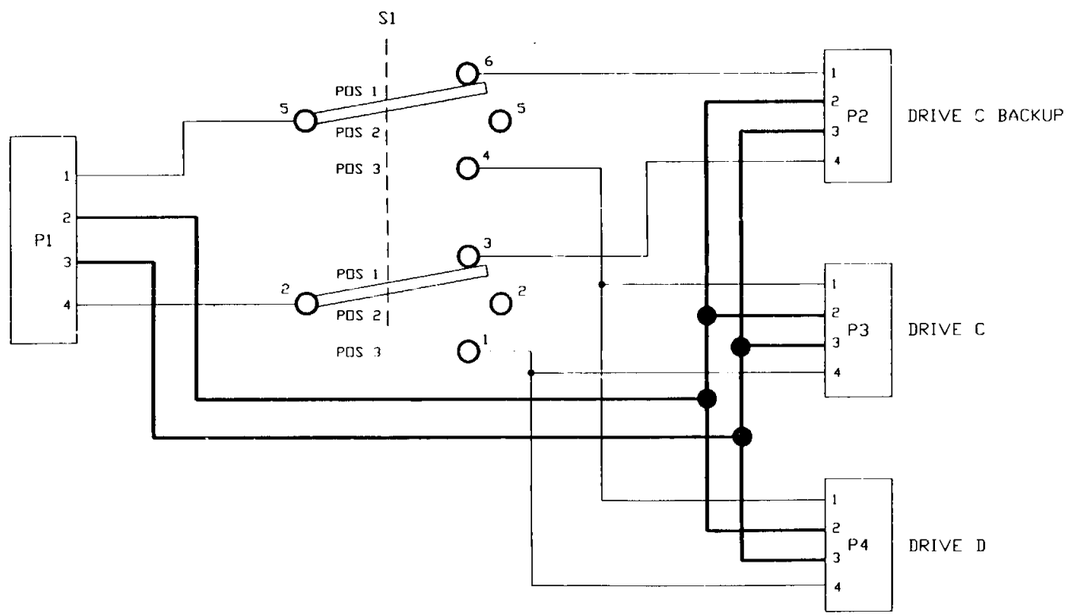

WIRING DIAGRAM

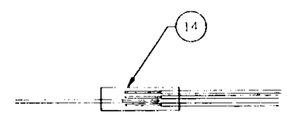

DETAIL B

SIGNATURES	DATE
DR D SCYPION	1/14/97
ENG	
CH	9/8/97
APP	
UE	
MATL	
STRESS	
AUTH	

NEXT ASS SEG46114201

COMP TYPE
[X] FLT HDWR
[ ] OTHER (SPECIFY)
[ ] APPLICABLE GSI

CALC WT:
MOD FILE:
DRW FILE: F113973.dwg

NATIONAL AERONAUTICS & SPACE ADMINISTRATION
LYNDON B JOHNSON SPACE CENTER HOUSTON TEXAS

ICBM DISK DRIVE
POWER CABLE
NEUROLAB

CODE IDENT NO 21356 | SIZE D | DWG NO SEG46113973
SCALE NONE | EAD 3104 | SHEET 2 OF 2

028

DCN NUMBER			DRAWING CHANGE NOTICE				SHEET 1 OF 1
DRAWING NO. SEG46113973	REV NC	SEQ.# 01	REASON FOR CHANGE	ORIGINATOR C. NUNEZ	DATE 4/30/99	QE R. SENEGAL	DATE 5/5/99
DRAWING TITLE ICBM DISK DRIVE POWER CABLE NEUROLAB			ENGINEERING CHANGES	ENG H. CHARLES	4/26/99	MATL H. KAO	5/7/99
				CH R. A. BULAND	4/29/99	STRESS D. VAN	5/10/99
PROJECT J104				APP L. BAUER	5/3/99		
				AUTH		FINAL APP	

WAS:

20 TWIST THESE TWO WIRES TOGETHER.

IS:

20 TWIST THESE TWO WIRES TOGETHER BETWEEN P2, P3, OR P4 AND THE POINT OF SPLICING.

-301	PART NUMBER	DESCRIPTION	MATERIAL	SPECIFICATION	ITEM	(IS) (WAS)
2	D144-25	SLEEVE, SOLDER	KYNAR	16	16	IS
2	D144-00	SLEEVE, SOLDER	KYNAR	16	16	WAS
2	D144-00	SLEEVE, SOLDER	KYNAR	16	14	IS
3	D144-01	SLEEVE, SOLDER	KYNAR	16	14	WAS

DWG FILE: 46113973 PROJECT: B104 HRF WS LIBRARY: NON ASC DWGS