WIRING DATA LIST								
SET	FUNTION	FROM	PIN NO.	TO	PIN NO.	WIRE	LENGTH	NOTES
	+12	P1	1	F1	1	M22759/22-26-2	13.0"	
	+12RTN		2	F1	2	M22759/22-26-0	13.0"	
	-12		3	F2	2	M22759/22-26-0	15.0"	
	-12RTN		4	F2	1	M22759/22-26-2	15.0"	
	+12		5	F3	1	M22759/22-26-2	15.0"	
	+12RTN		6	F3	2	M22759/22-26-0	15.0"	
	-12		7	F4	2	M22759/22-26-0	16.5"	
	-12RTN	P1	8	F4	1	M22759/22-26-2	16.5"	

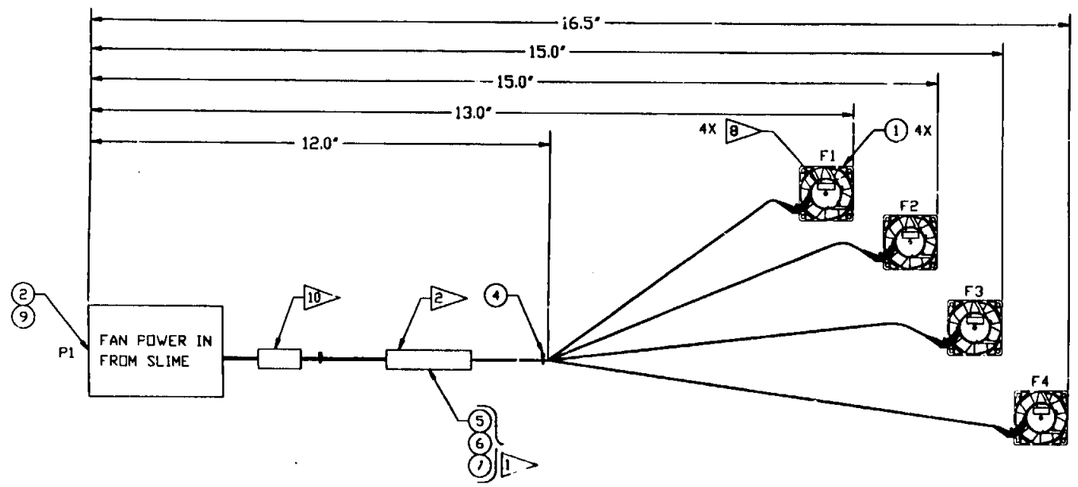

-301

10 MARK LABEL "P1 TO SLIME P2".
9 NOT USED
8 PERMANENT INK MARK FAN REF DES TO EACH FAN 1 THUR 4 "FAN X" IN .125 HIGH CHARACTERS WITH WHITE MARKING INK (ITEM 3) PER JSC-SPEC-M-1, PARA 3.7.8. APPROXIMATELY AS SHOWN.
7 INDEPENDENT INK INC, GARDENA, CA.
6 PANDUIT CORP., TINLEY PARK, IL.
5 AIRBORN CONNECTORS, ADDISON, TX.
4 3M CO., ST. PAUL, MN.
3 BRADY CO., MILWAUKEE, WI.
2 MARK LABEL "SEG46113972-301 S/N 100X".
1 TYPE LABEL IDENTIFICATION AS SHOW USING BRADY MARKER XC PC PLUS PRINTER & (ITEM 5) ROLL FILM FOR CABLE MARKING, AT THE DESIRED LOCATION, WRAP 2-3 TIMES WITH (ITEM 7) GLASS CLOTH TAPE. PLACE (ITEM 5) ROLL FILM ON (ITEM 7) GLASS CLOTH TAPE WITH MARKING SHOWING AND WRAP TWICE WITH (ITEM 6) CLEAR TAPE. CUT OFF ANY EXCESS MATERIAL.

NOTES:

7. TOLERANCE IS +1.0"/-0.0".
6. SOLDER PER NAS 5300.4 (3A-2).
5. THIS ASSEMBLY CONTAINS NO FRACTURE CRITICAL ELEMENTS.
4. CLEANLINESS REQUIREMENTS PER SN-C-0005 GC LEVEL
3. FABRICATE AND TEST IN ACCORDANCE WITH LS-6000-5.
2. ALL DIMENSIONS ARE IN INCHES.
1. INTERPRET PER JPG 8500.4

NOTES: UNLESS OTHERWISE SPECIFIED

ITEM	PART NUMBER	DESCRIPTION	MATERIAL	SPECIFICATION	ITEM
1 FT.	M23053/8-002-C	SHRINK TUBING	KYNAR	MIL-I-23053	9
AR	63/37025P3RE151	SOLDER		QQ-S-571	8
AR	361-1	TAPE, GLASS CLOTH		4	7
AR	800-1 1/2	TAPE, CLEAR		4	6
AR	WRCM-717-637W	MARKER CABLE	TEDLAR ROLL FILM	3	5
13	PLTIM-C76	CABLE TIE	TEFZEL	6	4
AR	73X	INK, MARKING	WHITE	7	3
1	WTA14PCJTB	CONNECTOR	POLYPHENYLENE SULFIDE GLASS FILLED	5	2
4	SDG46115191-701	FAN ASSEMBLY			1
-	-301	FAN HARNESS ASSY			

DIMENSIONAL TOLERANCE UNLESS NOTED OTHERWISE
0 ± 1 .000 ± .010
00 ± .03 ANGULAR ± 0
SURFACE FINISH IN MICROINCHES UNLESS NOTED OTHERWISE
NEXT ASSY SEG46114201

SIGNATURES		DATE
DR	D. SCYPION	1/15/97
ENG		1/15/97
CH		2/26/97
APP		3/24/97
QC		3/6/97
MATL		3/10/97
STRESS		3/4/97
AUTH		4/14/97

NATIONAL AERONAUTICS & SPACE ADMINISTRATION
LYNDON B. JOHNSON SPACE CENTER HOUSTON, TEXAS

ICBM
FAN HARNESS
A4WL NEUROLAB

CODE IDENT NO. 21356 | SIZE D | DWG NO. SEG46113972
SCALE NONE | EAS J104 | SHEET 1 OF 1

CALC NO.
MOD FILE:
CTV FILE: F113972.dwg
EQUIP TYPE
☒ FLT HDWR
☐ OTHER (SPECIFY)
☐ APPLICABLE GSE

026

DRAWING CHANGE NOTICE

SHEET 1 OF 1

DCN NUMBER						
DRAWING NO. SED46113972	REV NC	SEQ.# 01	REASON FOR CHANGE: ENGINEERING CHANGE.	ORIGINATOR C. NUNEZ	DATE 3/17/99	QE M. IWASA	DATE 4/1/99
DRAWING TITLE: ICBM FAN HARNESS A4WL NEUROLAB				ENG H. CHARLES	3/17/99	MATL F. MONTELEONE	3/25/99
				CH H. LUDL	3/16/99	STRESS D. VAN	3/31/99
PROJECT: B104				APP C. CHAMBELLAN	4/5/99		
				AUTH		FINAL APP	

LOCATION IS AT C7.
ADDED A TOLERANCE TO THE 12.0" DIMENSION.

WAS:	IS:
12.0"	$12.0''^{+0}_{-3}$

DWG FILE: DCN46113972 PROJECT: B104 HRF WS LIBRARY: NON ASC DWGS

DRAWING CHANGE NOTICE

SHEET 1 OF 1

DCN NUMBER		
DRAWING NO. SED46113972	REV NC	SEQ.# 02
DRAWING TITLE: ICBM FAN HARNESS A4WL NEUROLAB		
PROJECT: B104		

REASON FOR CHANGE	ORIGINATOR	DATE	QE	DATE
DRAFTING ERROR	C. NUNEZ	4/7/99	M. IWASA	4/14/99
	ENG: H. CHARLES	4/7/99	MATL: H. KAO	4/11/99
	CH: R. A. BULAND	4/6/99	STRESS: D. VAN	4/9/99
	APP: L. BAUER	4/13/99		
	AUTH		FINAL APP	

DRAWING PREFIX ON DCN 01 IS INCORRECT. CORRECT AS FOLLOWS:

WAS:	IS:
SED46113972	SEG46113972

DWG FILE: DCN46113972-02 PROJECT: B104 HRF WS LIBRARY: NON ASC DWGS