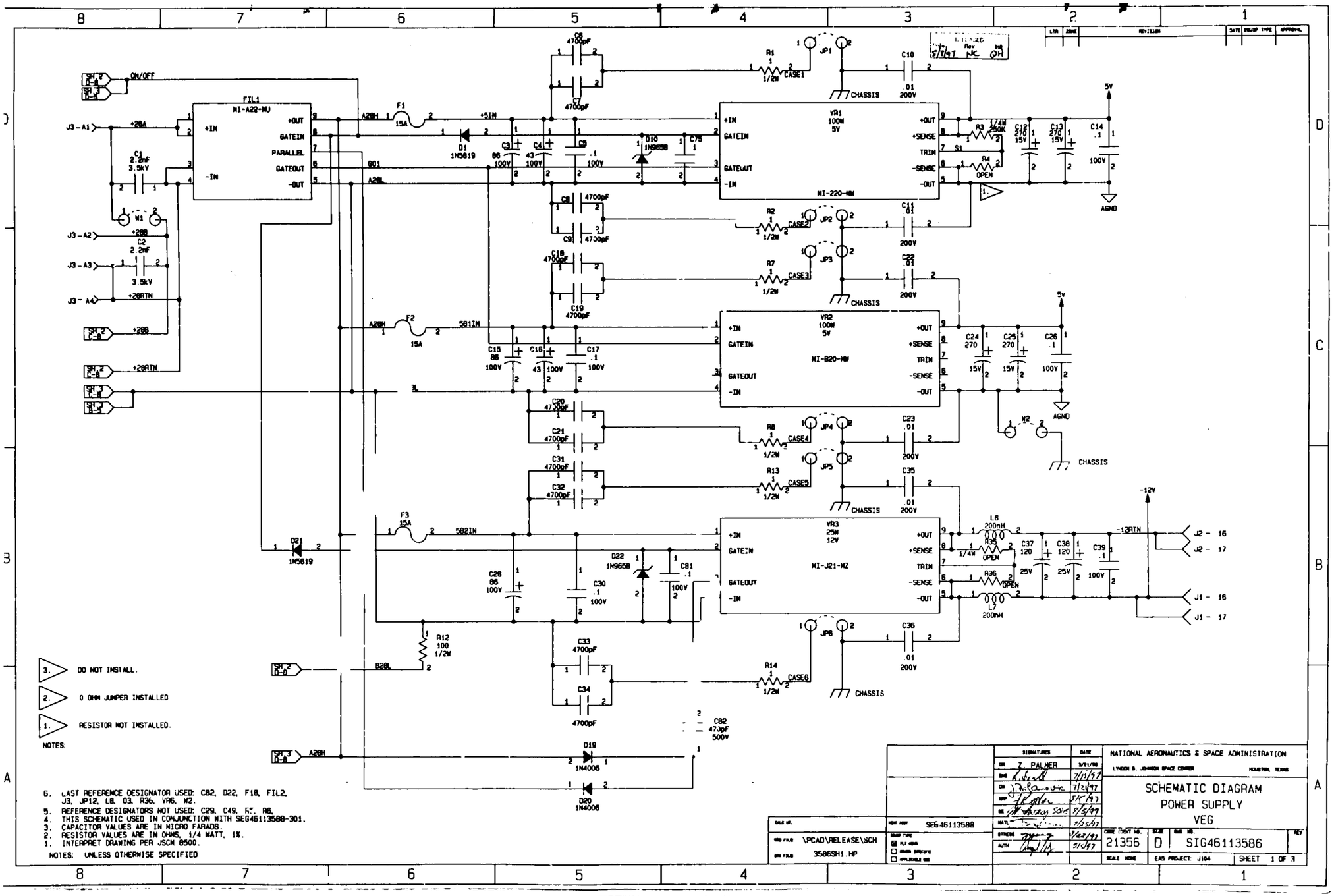

3. DO NOT INSTALL.
2. 0 OHM JUMPER INSTALLED
1. RESISTOR NOT INSTALLED.

NOTES:

6. LAST REFERENCE DESIGNATOR USED: C82, D22, F18, FIL2, J3, JP12, L8, O3, R36, VR6, W2.
5. REFERENCE DESIGNATORS NOT USED: C29, C49, R7, R8.
4. THIS SCHEMATIC USED IN CONJUNCTION WITH SEG46113588-301.
3. CAPACITOR VALUES ARE IN MICRO FARADS.
2. RESISTOR VALUES ARE IN OHMS, 1/4 WATT, 1%.
1. INTERPRET DRAWING PER JSCM 8500.

NOTES: UNLESS OTHERWISE SPECIFIED

SIGNATURES		DATE
DR	Z. PALMER	3/21/98
ENG	[signature]	7/15/97
CH	[signature]	7/24/97
APP	[signature]	8/5/97
QA	[signature]	8/5/97
MATL	[signature]	7/25/97
STRESS	[signature]	7/22/97
AUTH	[signature]	8/5/97

NEXT ASSY: SEG46113588

DWG FILE: \PCAD\RELEASE\SCH

DRN FILE: 3586SH1.HP

NATIONAL AERONAUTICS & SPACE ADMINISTRATION

LYNDON B. JOHNSON SPACE CENTER — HOUSTON, TEXAS

SCHEMATIC DIAGRAM
POWER SUPPLY
VEG

CODE IDENT NO. 21356 | SIZE D | DWG NO. SIG46113586 | REV

SCALE NONE | EAS PROJECT: J104 | SHEET 1 OF 3

310

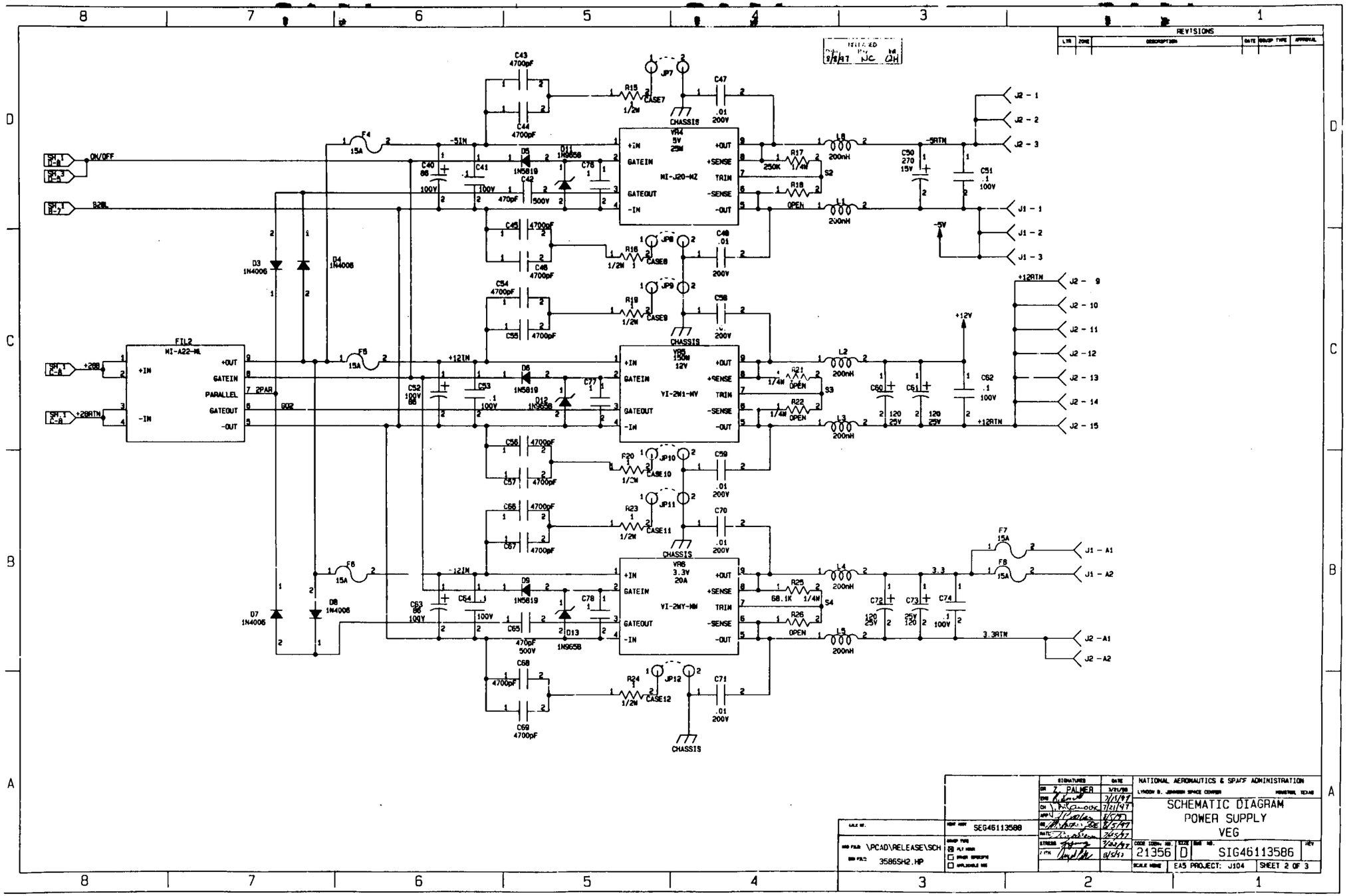

REVISIONS
NATIONAL AERONAUTICS & SPACE ADMINISTRATION
LYNDON B. JOHNSON SPACE CENTER
HOUSTON, TEXAS
SCHEMATIC DIAGRAM
POWER SUPPLY
VEG
SEG46113588
\PCAD\RELEASE\SCH
3586SH2.HP
21356
D
SIG46113586
EA5 PROJECT: J104
SHEET 2 OF 3

311

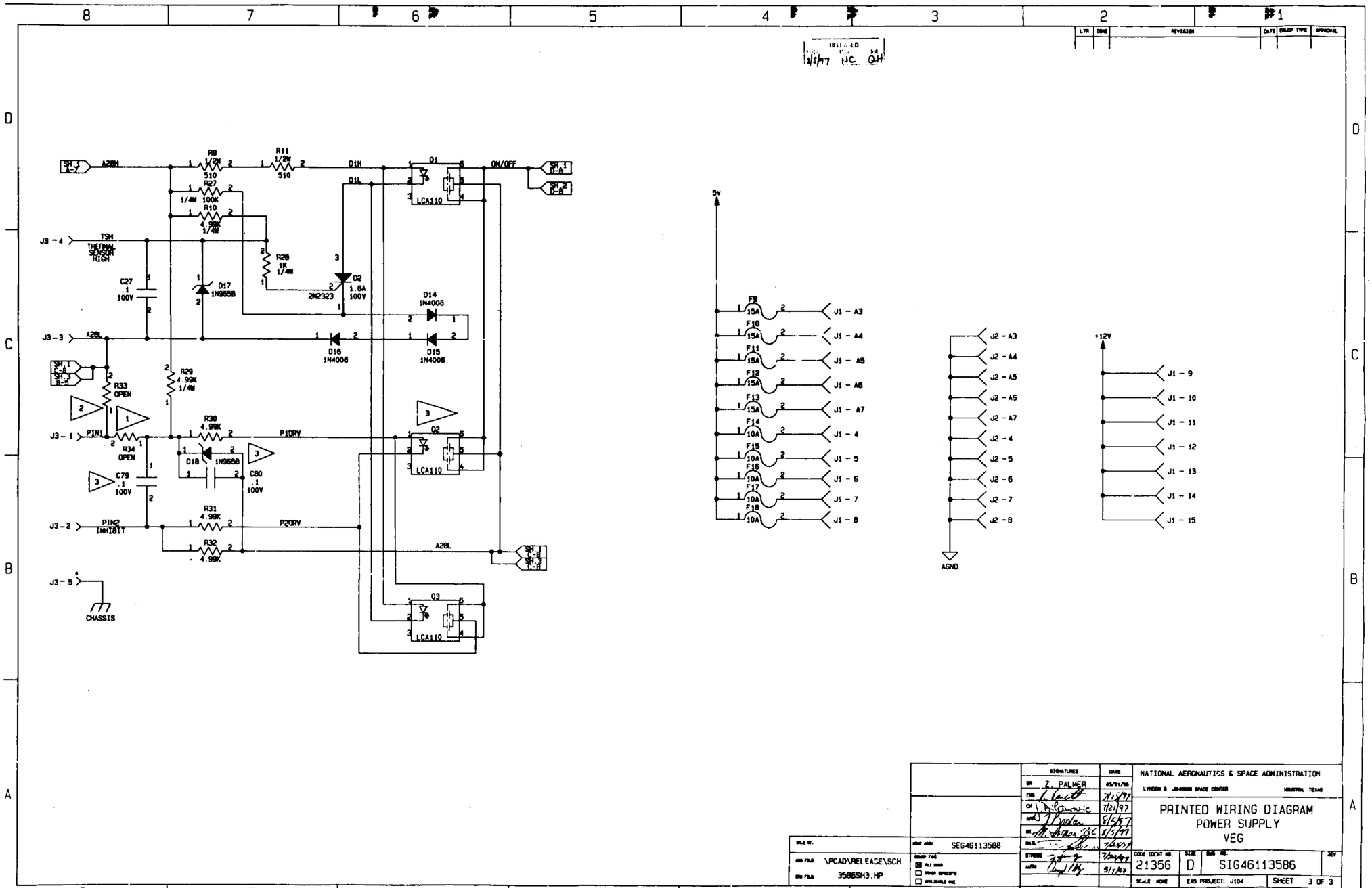
A28H
R9 1/2W 510
R11 1/2W 510
D1H
D1L
Q1
LCA110
ON/OFF
R27 1/4W 100K
R10 4.99K 1/4W
J3 - 4
TSM THERMAL SENSOR HIGH
R28 1K 1/4W
D2 1.5A 100V
2N2323
C27 .1 100V
D17 1N965B
D14 1N4006
J3 - 3
A28L
D16 1N4006
D15 1N4006
R29 4.99K 1/4W
R33 OPEN
J3 - 1
PIN1
R34 OPEN
R30 4.99K
P1ORY
Q2
D18 1N965B
C80 .1 100V
C79 .1 100V
J3 - 2
PIN2 INHIBIT
R31 4.99K
P2ORY
R32 4.99K
J3 - 5
CHASSIS
Q3
5V
F9 15A
F10 15A
F11 15A
F12 15A
F13 15A
F14 10A
F15 10A
F16 10A
F17 10A
F18 10A
J1 - A3
J1 - A4
J1 - A5
J1 - A6
J1 - A7
J1 - 4
J1 - 5
J1 - 6
J1 - 7
J1 - 8
J2 - A3
J2 - A4
J2 - A5
J2 - A6
J2 - A7
J2 - 4
J2 - 5
J2 - 6
J2 - 7
J2 - 8
AGND
+12V
J1 - 9
J1 - 10
J1 - 11
J1 - 12
J1 - 13
J1 - 14
J1 - 15
SEG46113588
\PCAD\RELEASE\SCH
3586SH3.HP
SIGNATURES
DATE
DR Z. PALMER 03/21/96
ENG 7/21/97
CH 7/21/97
8/5/97
8/5/97
7/24/97
7/24/97
9/1/97
NATIONAL AERONAUTICS & SPACE ADMINISTRATION
LYNDON B. JOHNSON SPACE CENTER HOUSTON, TEXAS
PRINTED WIRING DIAGRAM
POWER SUPPLY
VEG
CODE IDENT NO. 21356
SIZE D
DWG NO. SIG46113586
REV
SCALE NONE
EAS PROJECT: J104
SHEET 3 OF 3

312