REV	ZONE	DESCRIPTION OF CHANGE
D		1. REMOVED ITEM 12. 2. FLAG NOTE 11 WAS MACHINE ANGLE ON FRONT RUNNER (ITEM 3) AFTER ASSEMBLY.

30-98 D PR

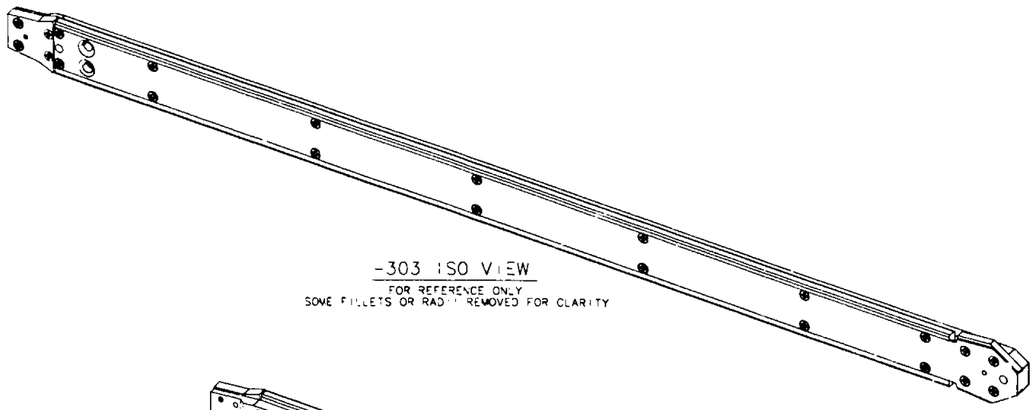

-303 ISO VIEW
FOR REFERENCE ONLY
SOME FILLETS OR RADII REMOVED FOR CLARITY

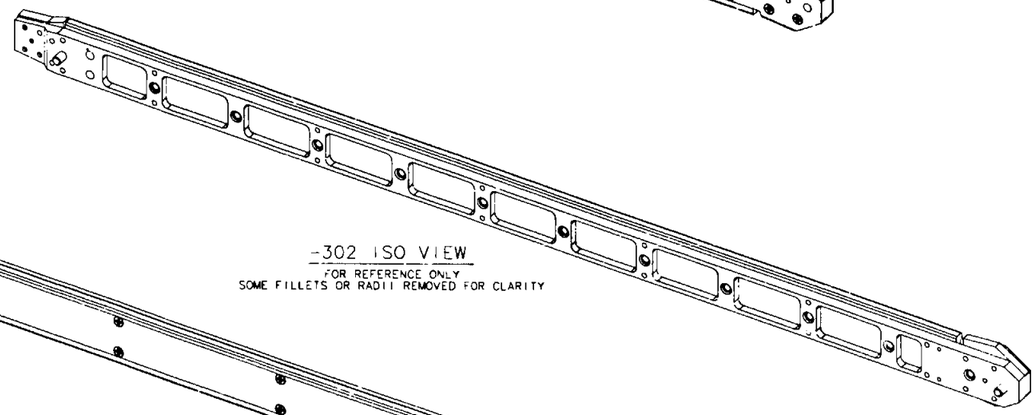

-302 ISO VIEW
FOR REFERENCE ONLY
SOME FILLETS OR RADII REMOVED FOR CLARITY

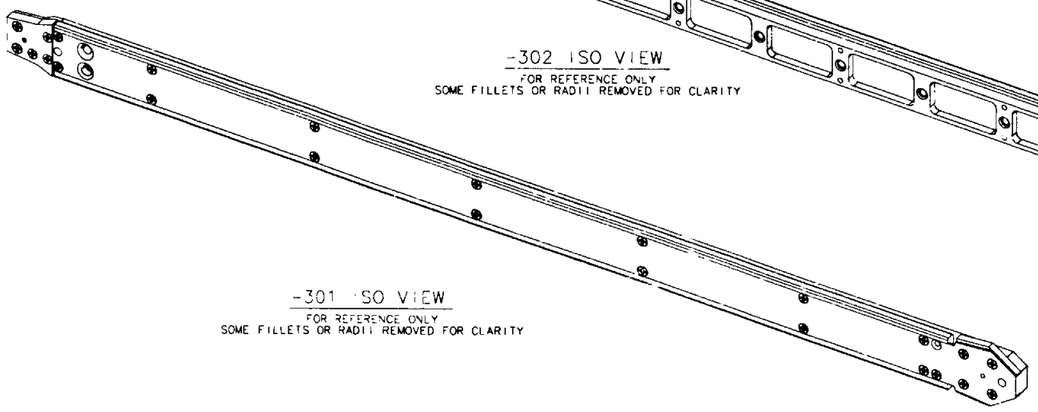

-301 ISO VIEW
FOR REFERENCE ONLY
SOME FILLETS OR RADII REMOVED FOR CLARITY

-303	-302	-301	-302	-301	PART NUMBER	DESCRIPTION	MATERIAL	SPECIFICATION	ITEM
	AR	AR			515-700	PRIMER, SUPER ZORPON	EPOXY	2	23
1					-013	END RUNNER, UNIVERSAL	DELRIN 1.2 X 1.3 X .25	4 5	22
	1				-012	SLIDE BAR, UNIVERSAL	7075-T7351 AL ALY .500 X 1.1 X 24.8	QQ-A-250/12F	21
1	—				-702	SLIDE BAR ASSY, UNIVERSAL			20
AR			AR	AR	222	THREAD LOCKING COMPOUND		8	9
									8
									7
20			21	21	NAS1102E04-6	SCREW, CSK HD 100°	CRES 1/2-40UNJC-3A X .375L		6
2			3	3	NAS1102E04-5	SCREW, CSK HD 100°	CRES 1/2-40UNJC-3A X .312L		5
					MS21209F-05L	INSERT, SCREW-LOCK	CRES 5/40-32UNF X .285L		4
									3
									2
	2	2			-011	STRAIGHT DOWEL PIN	CRES 304 7/32(.219) DIA X .705L	QQ-S-763E	10
			1		-010	END RUNNER, RH	DELRIN 1.2 X 1.3 X .25	4 5	9
				1	-009	END RUNNER, LH	DELRIN 1.2 X 1.3 X .25	4 5	9
			1		-008	BOTTOM RUNNER, RH	TEFLON TFE .25 X .40 X 22.1	14 3	8
				1	-007	BOTTOM RUNNER, LH	TEFLON TFE .25 X .40 X 22.1	14 3	7
1			1		-006	RUNNER	TEFLON TFE .25 X .40 X 22.1	14 3	6
1				1	-005	RUNNER	TEFLON TFE .25 X .40 X 22.1	14 3	5
									4
2			2	2	-003	FRONT RUNNER	DELRIN .170 X .500 X 1.481	4 5	3
		1			-001	SLIDE BAR	7075-T7351 AL ALY .500 X 1.1 X 24.8	QQ-A-250/12F	2
	—			1	-701	SLIDE BAR ASSY			1
—					-303	SLIDE ASSY, UNIVERSAL			
			—		-302	SLIDE ASSY, RH			
				—	-301	SLIDE ASSY, LH			

DIMENSIONAL TOLERANCE UNLESS NOTED OTHERWISE: .X ± .03, .XX ± .005, .XXX ± .001, ANGULAR ± 30'
SURFACE FINISH PER MIL-STD-10 UNLESS NOTED OTHERWISE
CONTROL DATA: SEQ46113331, SEQ46113376
YES / NO
FLY HOME / APP. CABLE CODE / OTHER (SPECIFY)

SIGNATURES / DATE
DR C. SHANNON 12/5/96
ENG
QA
CM
SAFETY
MATL
STRESS
AUTH

NATIONAL AERONAUTICS AND SPACE ADMINISTRATION
LYNDON B. JOHNSON SPACE CENTER HOUSTON, TEXAS

SLIDE ASSY - UOF

PROJECT ETAC S R-RF

SIZE	CODE IDENT NO	DWG NO	REV
E	21356	SDG46113363	D

SCALE 1/1 DWG EAS SHEET 1 OF 5

15. THREADS SHALL BE IN ACCORDANCE WITH MIL-S-8879C.
14. ASTM D4894-94, TYPE I, GRADE 1.
13. TORQUE FASTENERS (ITEMS 15 AND 16) TO 4-5 INCH POUNDS ABOVE RUNNING TORQUE.
12. COURTAULDS AEROSPACE, GRAND PRAIRIE, TX.
11. MACHINE ANGLES AND DIMENSIONS ON FRONT RUNNER (ITEM 3), END RUNNER (ITEMS 9,10 AND 22) AFTER ASSEMBLY.
10. ANNEALED AND CENTERLESS GROUND 304 CRES. CLEAN AND PASSIVATE PER QQ-P-35C.
9. APPLY THREAD LOCKING COMPOUND (ITEM 19) TO SCREW THREADS PER JSCM 8080. STD MP/10 PRIOR TO INSTALLATION.
8. LOCTITE CORP. NEWINGTON, CT.
7. TOP HOLE NOT USED.
6. INSTALL INSERTS (ITEM 14) PER MS33537E. REMOVE TANG. APPLY PRIMER (ITEM 23) TO EXTERNAL THREADS OF INSERTS PER MANUFACTURER'S INSTRUCTIONS DURING INSTALLATION.
5. ASTM D4181-96, GROUP I, CLASS I, GRADE I.
4. CADILLAC PLASTICS AND CHEMICAL CO. HOUSTON, TX.
3. E.I. DUPONT DE NEMOURS & CO INC. WILMINGTON, DE.
2. ELECTROCHEMICAL ETCH PN PER JSC-SPEC-M-1B, PARA 3.7.4. LOCATE APPROXIMATELY AS SHOWN.
1. CHEMICAL FILM PER MIL-C-5541E, CLASS 3.

FLAG NOTES:

6. BREAK ALL EDGES AND CORNERS .02 - .04. FILLET RADII .02 MAX.
5. CLEANLINESS REQUIREMENTS PER SN-C-0005C LEVEL GC. CLEAN TO LEVEL GC PER JHB 5322C.
4. THIS ASSEMBLY DOES NOT CONTAIN FRACTURE CRITICAL PARTS.
3. ALL DIMENSIONS ARE IN INCHES [MILLIMETERS]. MILLIMETERS ARE FOR REFERENCE ONLY.
2. FABRICATION TOLERANCES AND PRACTICES PER SKZ361037550.
1. INTERPRET PER JPG 8500.4C.
NOTES: UNLESS OTHERWISE SPECIFIED.

REV	ZONE	DESCRIPTION OF CHANGE
D		SEE SHEET ONE.

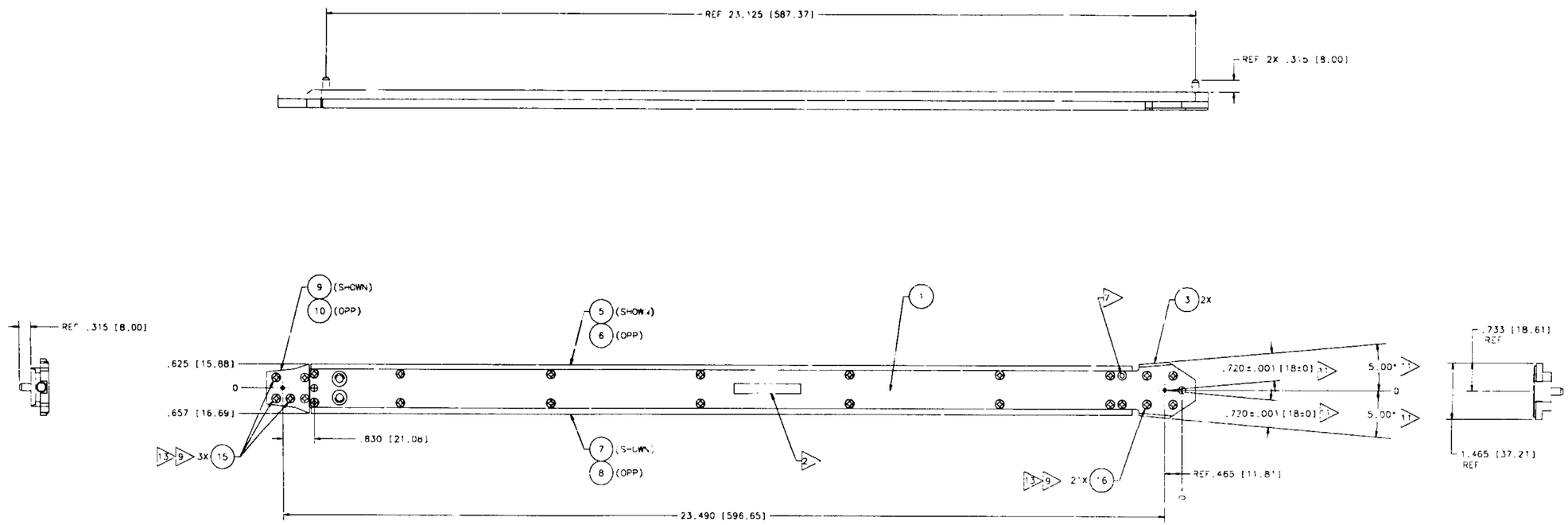

-301 (SHOWN)

-302 (OPP)

SIZE	CODE IDENT NO	DWG NO	REV
E	21356	SDG46113363	D
SCALE 1/1	DWG EA5	SHEET 2 OF 5	

REV	ZONE	DESCRIPTION OF CHANGE
D		SEE SHEET ONE

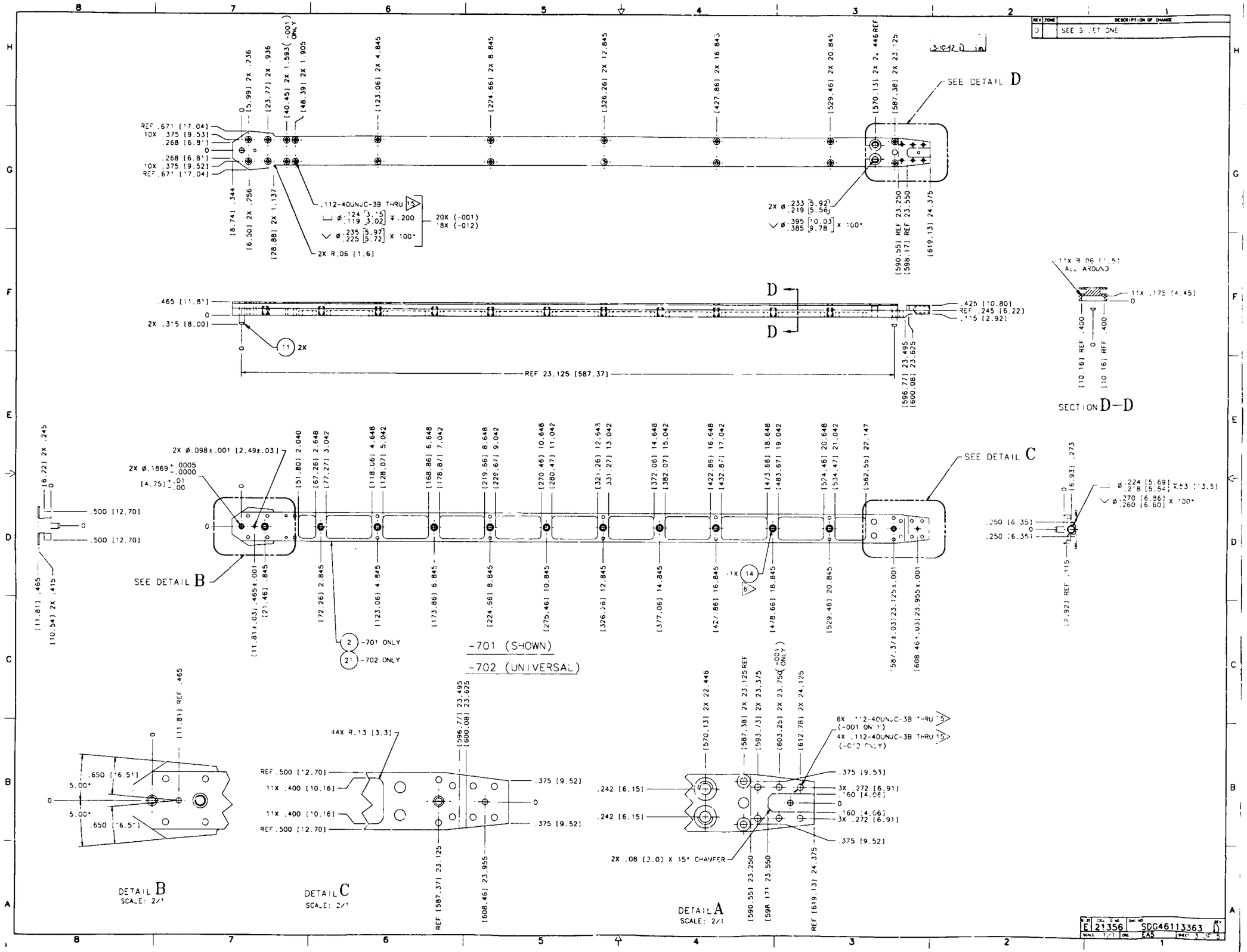

REV	ZONE	DESCRIPTION OF CHANGE
D		[illegible] SHEET ONE.

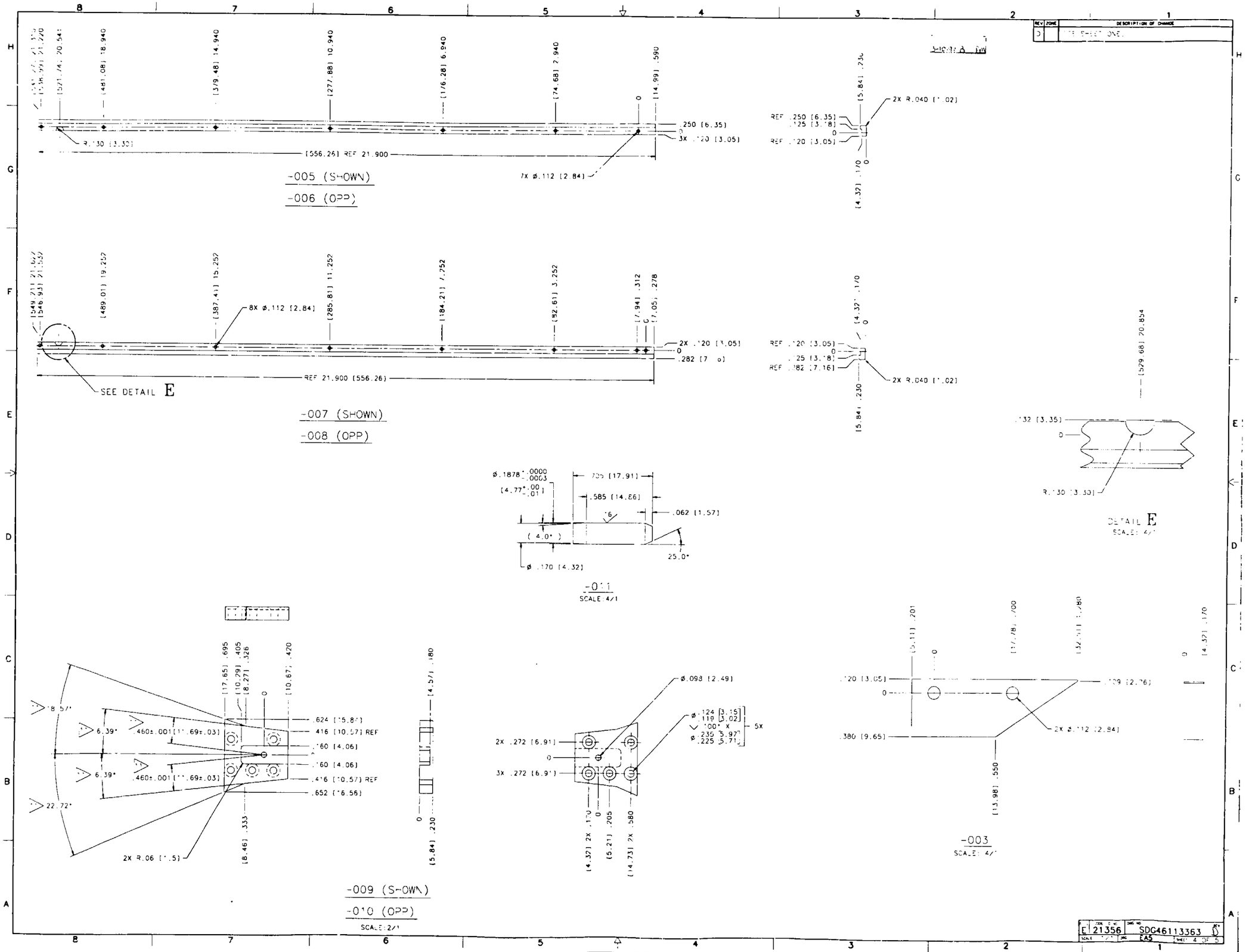

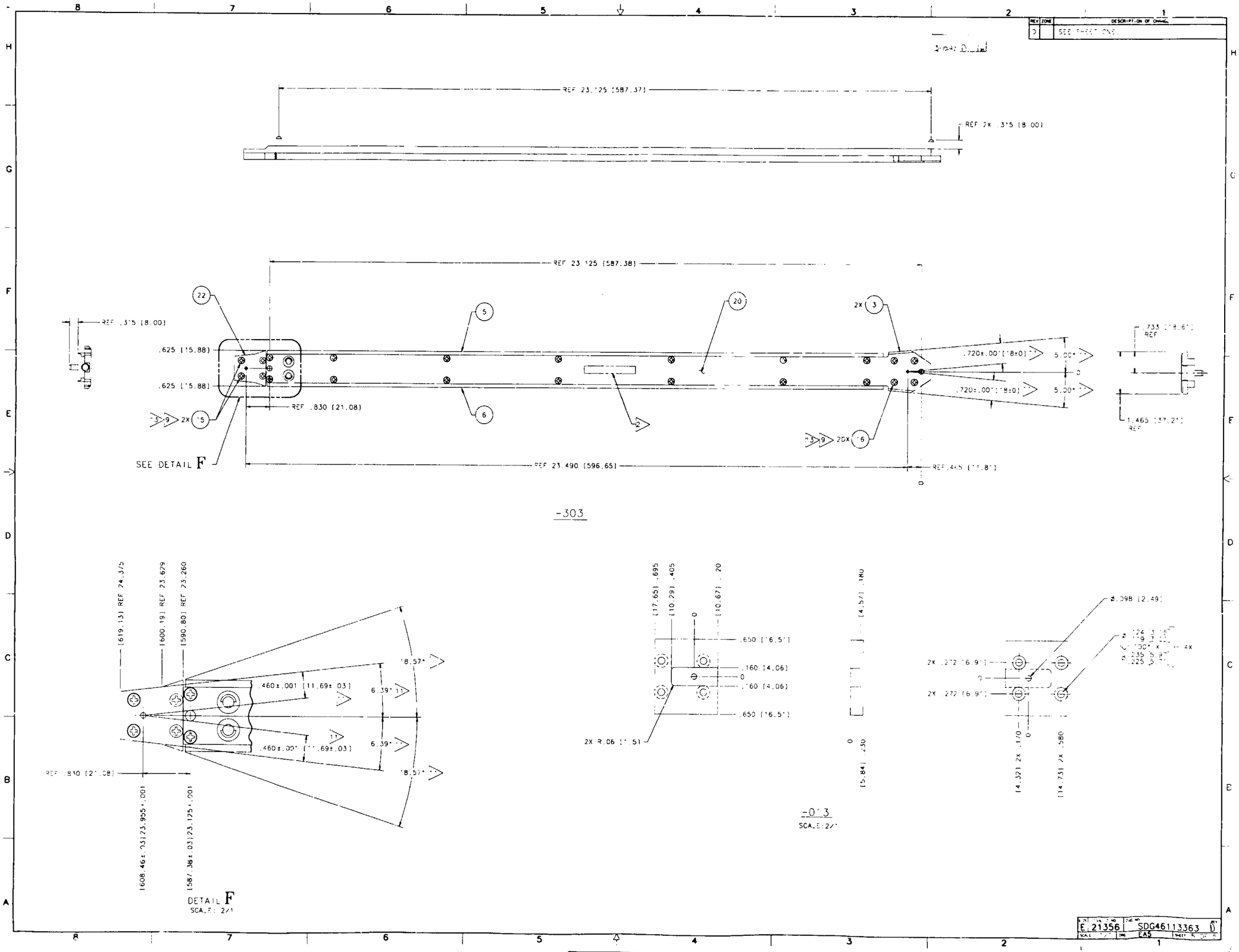

REV ZONE DESCRIPTION OF CHANGE
D SEE SHEET ONE
REF 23.125 [587.37]
REF 2X .315 [8.00]
REF 23.125 [587.38]
REF .315 [8.00]
.625 [15.88]
.625 [15.88]
REF .830 [21.08]
SEE DETAIL F
REF 23.490 [596.65]
REF .465 [11.81]
.720±.001 [18±0]
5.00°
.720±.001 [18±0]
5.00°
.733 [18.61] REF
1.465 [37.21] REF
-303
[619.13] REF 24.375
[600.19] REF 23.679
[590.80] REF 23.260
.460±.001 [11.69±.03]
.460±.001 [11.69±.03]
6.39°
6.39°
8.57°
8.57°
REF .830 [21.08]
[608.46±.03] 23.955±.001
[587.38±.03] 23.125±.001
DETAIL F
SCALE: 2/1
[17.65] .695
[10.29] .405
[10.67] .20
.650 [16.5]
.160 [4.06]
.160 [4.06]
.650 [16.5]
2X R.06 [1.51]
[4.57] .180
[5.84] .230
-013
SCALE: 2/1
Ø.098 [2.49]
2X .272 [6.91]
2X .272 [6.91]
[14.32] 2X .170
[14.73] 2X .580
E 21356
SDG46113363
EA5