WIRE DATA LIST

FUNCTION	FROM	PIN	TO	WIRE AWG	LENGTH	NOTES
+28	P1	A1	+28VDC	M22759/11-16-9	6 FT	
RTN	P1	A2	28RTN	M22759/11-16-0	6 FT	19
INHIBIT HIGH	P1	1	INHIBIT HIGH	M22759/11-20-9	6 FT	
12V BIT	P1	2	12V BIT	M22759/11-20-9	6 FT	
15V BIT	P1	3	15V BIT	M22759/11-20-9	6 FT	
INHIBIT LOW	P1	A2	INHIBIT LOW	M22759/11-20-0	6 FT	19

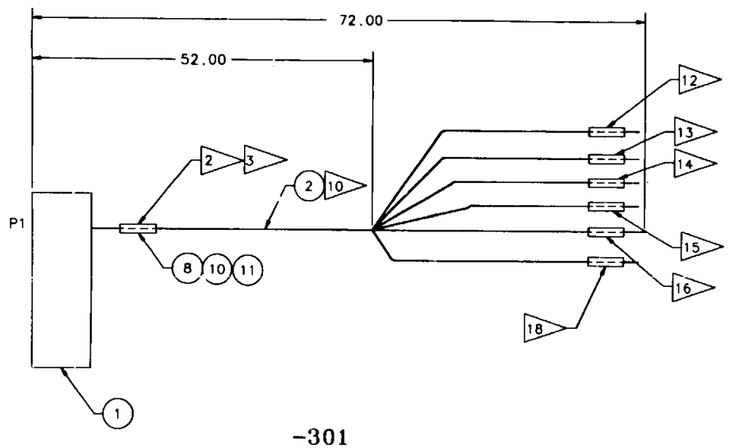

-301

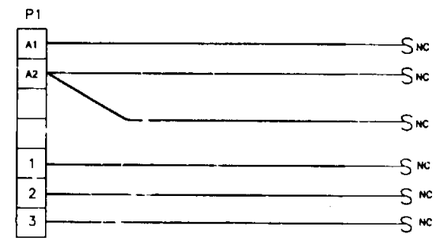

WIRING DIAGRAM

1	D144-00	SOLDER SLEEVE		1	15
AR	6249002	EXPANDO SLEEVING 1/4"		6	14
AR	M23053/8-002-C	1/16" SHRINK SLEEVE	PVDF	MIL-I-23053	13
2	DM53744-7	SOCKET PIN		8	12
AR	63/37.025P3REL15	SOLDER		QQ-S-571	11
AR	361-1	GLASS CLOTH TAPE		5	10
AR	800	TAPE, CLEAR		5	9
AR	WRCM-717-637W	CABLE MARKER,	TEDLAR ROLL FILM	4	8
75	PLT1M-C76	CABLE TIE	TEFZEL	7	7
AR	M23053/8-003-C	SHRINK SLEEVE	PVDF	MIL-I-23053	6
6 FT	M22759/11-20-0	WIRE, STRANDED	20 AWG BLACK	MIL-W-22759	5
27 FT	M22759/11-20-9	WIRE, STRANDED	20 AWG WHITE	MIL-W-22759	4
6 FT	M22759/11-16-0	WIRE, STRANDED	16 AWG BLACK	MIL-W-22759	3
6 FT	M22759/11-16-9	WIRE, STRANDED	16 AWG WHITE	MIL-W-22759	2
1	DAM7W25A197	CONNECTOR		8	1
-	-301	CABLE ASSEMBLY			
-301	PART NUMBER	DESCRIPTION	MATERIAL	SPECIFICATION	ITEM

13> MARK LABEL "28 RETURN".
12> MARK LABEL "+28VDC".
11> TWIST A1 AND A2 (2-16AWG WIRES) TOGETHER FROM P1 TO BREAKOUT.
10> WRAP P1 WITH 2 TURNS OF GLASS CLOTH TAPE (ITEM 10).
9> NOT USED.
8> ITT CANNON, SANTA, ANA, CA.
7> PANDUIT CORP, TINLEY PARK, IL.
6> BENTLY HARRIS, LYONSVILLE, PA.
5> 3M CORP, ST. PAUL, MN.
4> BRADY CO, MILWAUKEE, WI.
3> MARK LABEL: "VEG POWER SUPPLY INPUT, TEST CABLE SEG38115009-301 SERNO 1XXX."
2> TYPE LABEL IDENTIFICATION AS SHOWN USING BRADY MARKER XC PLUS PRINTER AND (ITEM 8) ROLL FILM FOR CABLE MARKING. AT THE DESIRED LOCATION WRAP CABLE 2-3 TIMES WITH (ITEM 10) GLASS CLOTH TAPE (ITEM 8) ROLL FILM ON (ITEM 10) GLASS CLOTH TAPE WITH MARKING SHOWING, AND WRAP TWICE WITH (ITEM 9) CLEAR TAPE. CUT OFF ANY EXCESS MATERIAL.
1> RAYCHEM, MENLO PARK, CA.

NOTES:

19> TWO WIRES ARE SPLICED INTO THIS PIN USING SOLDER SLEEVE (ITEM 15).
18> MARK LABEL "INHIBIT LOW".
17> STRIP AND TIN WIRE 1" WITH SOLDER (ITEM 11).
16> MARK LABEL "15V BIT".
15> MARK LABEL "12V BIT".
14> MARK LABEL "INHIBIT HIGH".

6. CLEANLINESS REQUIREMENTS PER SN-C-0005 LEVEL GC.
5. ALL DIMENSIONS ARE IN INCHES.
4. FABRICATE & TEST IN ACCORDANCE WITH LS-60035.
3. SOLDER PER NAS 5300.4 (3A-2).
2. THIS ASSEMBLY CONTAINS NO FRACTURE CHRITICAL ELEMENTS.
1. INTERPRET PER JSCM 8500.

NOTES: UNLESS OTHERWISE SPECIFIED.

DIMENSIONAL TOLERANCE UNLESS NOTED OTHERWISE
0 ± .1 .000 ± .010
.00 ± .03 ANGULAR ±
SURFACE FINISH IN MICROINCHES RMS UNLESS NOTED OTHERWISE ✓
NEXT ASSY NA

SIGNATURES	DATE
DR C. SHANNON	6/12/97
ENG	7-11-97
CK	7-9-97
APP	7/24/97
QE	7/28/97
MATL	7/1/97
STRESS	7/1/97
AUTH	7/1/97

NATIONAL AERONAUTICS & SPACE ADMINISTRATION
LYNDON B. JOHNSON SPACE CENTER HOUSTON, TEXAS

TEST CABLE ASSEMBLY
AUX POWER SUPPLY INPUT

CODE IDENT NO. 21356 | SIZE D | DWG NO. SEG38115009
SCALE NONE | EAS | J104 | SHEET 1 OF 1

CALC WT:
PROJECT: J104-HHT-VEG
LIBRARY: NON-ASC DWGS
NAME: 38115009.dwg
EQUIP TYPE
☐ FLT HDWR
☐ OTHER (SPECIFY)
☒ APPLICABLE GSE

304