WIRE DATA

FUNCTION	FROM	TO	WIRE	FUNCTION	FROM	TO	WIRE
GND	J1-1	P1-1	3302-60	N DIR	J1-18	P1-18	3302-60
N-RPM	-2	-2		GND	-19	-19	
GND	-3	-3		N-STOP STEP	-20	-20	
NC	-4	-4		GND	-21	-21	
GND	-5	-5		N-WRITE DATA	-22	-22	
D-RATED	-6	-6		GND	-23	-23	
GND	-7	-7		N-WRITE GATE	-24	-24	
P-INDEX	-8	-8		GND	-25	-25	
GND	-9	-9		P-TRACK 0	-26	-26	
N-MOTORON 1	-10	-10		GND	-27	-27	
GND	-11	-11		P-WRITE PROTECT	-28	-28	
N-DRIVE SEL2	-12	-12		GND	-29	-29	
GND	-13	-13		N-WRITE DATA	-30	-30	
N-DRIVE SEL1	-14	-14		GND	-31	-31	
GND	-15	-15		N-SIDE SELECT	-32	-32	
N-MOTORON 2	-16	-16		GND	-33	-33	
GND	J1-17	P1-17	3302-60	DISK CHANGE	J1-34	P1-34	3302-60

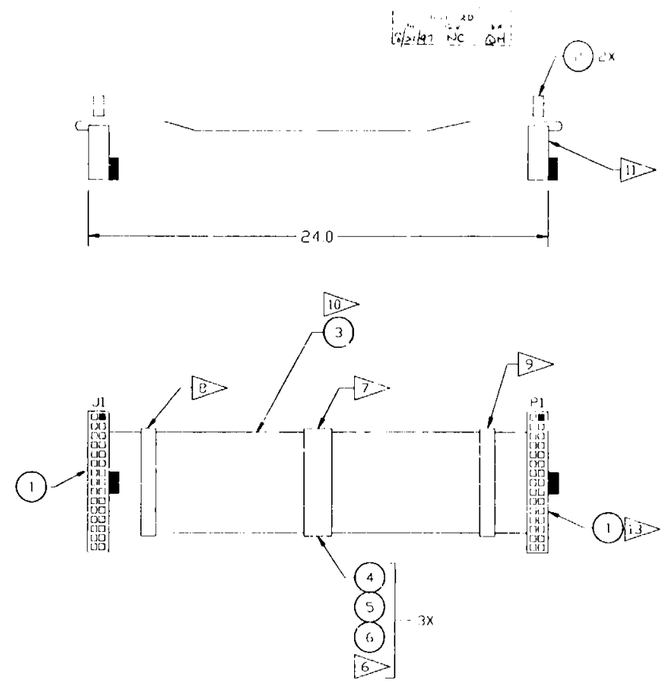

13 STRAIN RELIEF PART NO. 3448-3034 COMBINED WITH CONNECTOR PART NO. 3414-6600 (3M CO, AUSTIN, TX) ARE ACCEPTABLE SUBSTITUTES.

12 3M CO., AUSTIN, TX.

11 ASSEMBLE THIS CONNECTOR FIRST AND APPLY STRAIN RELIEF.

10 USE BROWN WIRE AT PIN 1

9 MARK LABEL "P1"

8 MARK LABEL "J1"

7 MARK LABEL "SEG38115007-301".

6 TYPE LABEL IDENTIFICATION AS SHOWN USING BRADY MARKER XC PLUS PRINTER AND CABLE MARKER (ITEM 4). AT THE DESIRED LOCATION, WRAP CABLE 2-3 TIMES WITH GLASS CLOTH TAPE (ITEM 5). PLACE THE CABLE MARKER ON THE GLASS CLOTH TAPE (ITEM 5) WITH THE MARKING SHOWING, AND WRAP TWICE WITH CLEAR TAPE (ITEM 6). CUT OFF EXCESS MATERIAL

5 BRADY CO., MILWAUKEE, WI

4 DIGIKEY ASSU34-ND IS EQUIVALENT

3 DIGIKEY AKC34A-ND IS EQUIVALENT.

2 AMP INC. HARRISBURG, PA

1 3M CO., ST. PAUL, MN

NOTES

7. LABEL ACCORDING TO LS-60035.
6. ALL DIMENSIONS ARE IN INCHES.
5. ORIENTATION OF CONNECTOR KEYS MUST BE SHOWN
4. THIS ASSEMBLY CONTAINS NO FRACTURE CRITICAL ELEMENTS
3. CLEANLINESS REQUIREMENTS PER SN-C-0005, LEVEL GC
2. FABRICATE PER JPL CAPB77001 REV. A PERFORM DIELECTRIC TEST AT 500VDC AT 1mA INSTEAD OF THE INSULATION RESISTANCE TEST.
1. INTERPRET DRAWING PER JSCM 8500

NOTES UNLESS OTHERWISE SPECIFIED

QTY	PART NUMBER	DESCRIPTION	MATERIAL	SPECIFICATION	ITEM
AR	800-1/2	TAPE, CLEAR		1	6
AR	361-1/2	GLASS CLOTH TAPE		1	5
AR	WCRM 717-637W	MARKER, CABLE	TEDLAR ROLL FILM	5	4
24 IN	3302-60	FLAT RIBBON CABLE		12	3
2	111564-6	STRAIN RELIEF		2 4	2
2	111633-8	CONNECTOR		2 3	1
AR	-301	CABLE ASSEMBLY			

SIGNATURES: DATE
DR M. COONER 6/6/97
CHK 7/3/97
APP 8/4/97
APP 8/8/97
MATL 8/16/97
STRESS 8/5/97
AUTH 8/8/97

NATIONAL AERONAUTICS & SPACE ADMINISTRATION

CABLE ASSEMBLY
FLOPPY DISK, GSE

CODE IDENT NO 21356 | SIZE D | DWG NO SEG38115007 | REV

SCALE NONE | EAS 3104

303