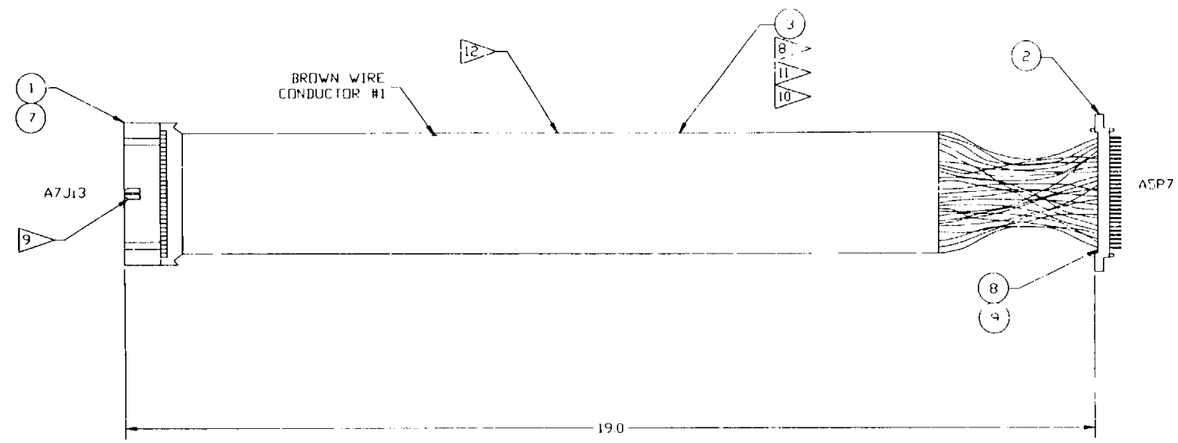

-301

17> MARK LABEL "A5P7 SCSI LIME".

16> MARK LABEL "A7J13 CPU BD".

15> MARK LABEL "SEG38115005-301 GSE SCSI".

14> TYPE LABEL IDENTIFICATION AS SHOWN USING BRADY MARKER XC PLUS PRINTER AND (ITEM 4) ROLL FILM FOR CABLE MARKING. AT THE DESIRED LOCATION, WRAP CABLE 2-3 TIMES WITH (ITEM 6) GLASS CLOTH TAPE. PLACE (ITEM 4) ROLL FILM ON (ITEM 6) GLASS CLOTH TAPE WITH MARKING SHOWING, AND WRAP TWICE WITH (ITEM 5) CLEAR TAPE. CUT OFF ANY EXCESS MATERIAL.

13> MAKE LABEL ONLY WIDE ENOUGH TO ACCOMMODATE LETTERING; NO WIDER THAN 0.5 INCHES.

12> FOLD CABLE AS GIVEN IN DETAIL C BEFORE PLACING LABELS. PLACE LABELS IN APPROXIMATE LOCATIONS AS SHOWN IN DETAIL D.

11> NOTE THAT CONDUCTOR No. 25 IS UNCONNECTED AT A5P7 END. DRESS WITH HEAT SHRINK TUBING (ITEM 8)

10> CABLE MUST REMAIN FLAT AS MUCH AS POSSIBLE. AVOID PLEATS AND FOLDS.

9> ORIENT CONNECTOR KEY AS SHOWN SEE DETAIL B.

8> PREPARE RIBBON CABLE (ITEM 3) AS GIVEN IN DETAIL A.

7> DIGIKEY PART NO. A5U50-ND IS EQUIVALENT.

6> DIGIKEY PART NO. A6C50A-ND IS EQUIVALENT

5> AMP INC., HARRISBURG, PA

4> 3M COMPANY, AUSTIN, TX.

3> 3M CO., ST. PAUL, MN

2> BRADY CO., MILWAUKEE, WI.

1> AIRBORN INC., ADDISON, TX.

NOTES:

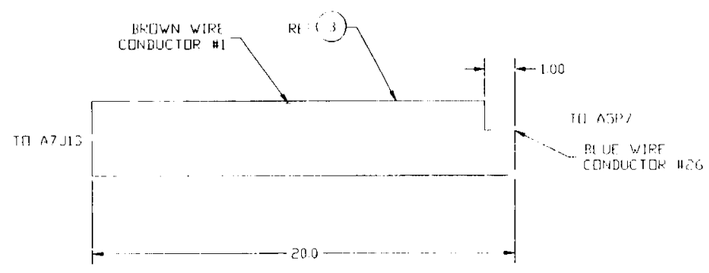

DETAIL A

8. TOLERANCE ON CABLE LENGTH IS ±0.25.
7. LABEL IN ACCORDANCE WITH LS-60035.
6. SOLDER PER NAS 5300.4 (3A-2)
5. THIS ASSEMBLY CONTAINS NO FRACTURE CRITICAL ELEMENTS.
4. CLEANLINESS REQUIREMENTS PER SN-C 0805 LEVEL "A".
3. FABRICATE PER JPL QAPB 77001 REV. A
2. ALL DIMENSIONS ARE IN INCHES
1. INTERPRET PER JSCM 8500.

NOTES: UNLESS OTHERWISE SPECIFIED

PIC	PART NUMBER	DESCRIPTION	MATERIAL	SPECIFICATION	ITEM
AR	63/37 OR SN63	SOLDER		QQ-S-571	9
AR	FP-301 3/64	HEAT SHRINK TUBING	POLYOLEFIN	4	8
2	11504.4	STRAIN RELIEF		4 5	7
AR	361-1 1/2	GLASS CLOTH TAPE		4	6
AR	300-1 1/2	TAPE, CLEAR		4	5
AR	WRCM-712 637W	CABLE MARKER	TEDLAR ROLL FILM	2	4
20'	3302/60	RIBBON CABLE, 26 GA	PVC	4	3
1	WG/80PC 11B	CONNECTOR, 80 PIN		4	2
1	1-111633-6	CONNECTOR, 50 PIN		4 6	1
	-301	CABLE ASSEMBLY			

DIMENSIONAL TOLERANCE UNLESS NOTED OTHERWISE

SIGNATURES / DATE

DRAFT: H. Clark 7/7/97
ENG: R.P. Ballard 7/9/97
7/25/97
7/25/97
MATL: 7/24/97
STRESS: 7/24/97
AUTH: 7/24/97

NATIONAL AERONAUTICS & SPACE ADMINISTRATION

CPU TO SPACELINK GSE CABLE VCL

SIZE D

WIRE DATA LIST

FUNCTION	FROM	PIN NO.	TO	PIN NO.	WIRE	LENGTH
GND	A7 U3	1	A5P7	3	3302/60	19.00
SCZDB0		2		2		
GND		3		5		
SCZDB1		4		4		
GND		5		7		
SCZDB2		6		6		
GND		7		9		
SCZDB3		8		8		
GND		9		11		
SCZDB4		10		10		
GND		11		37		
SCZDB5		12		12		
GND		13		66		
SCZDB6		14		13		
GND		15		43		
SCZDB7		16		16		
GND		17		17		
SCZBP		18		18		
GND		19		19		
GND		20		20		
GND		21		21		
GND		22		22		
GND		23		23		
GND		24		24		
NOT CONNECT		25				
TERMPWR		26		26		
GND		27		29		
GND		28		55		
GND		29		30		
GND		30		56		
GND		31		31		
SCZATN		32		32		
GND		33		33		
GND		34		34		
GND		35		35		
SCZBSY		36		36		
GND		37		63		
SCZACK		38		38		
GND		39		64		
SCZRST		40		39		
GND		41		65		
SCZMSG		42		42		
GND		43		45		
SCZSEL		44		44		
GND		45		47		
SCZCD		46		46		
GND		47		51		
SCZREQ		48		48		
GND		49		52		
SCZIO	A7 U3	50	A5J7	50	3302/60	19.00

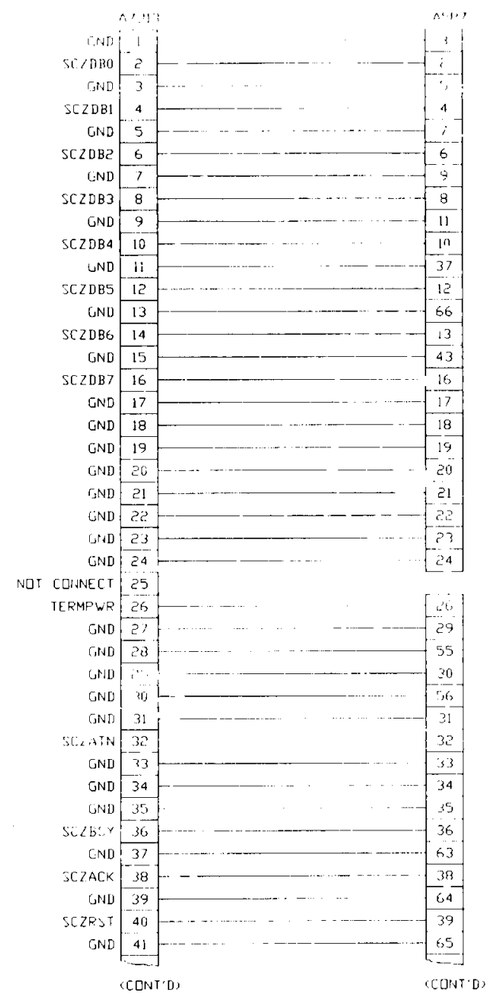

WIRING DIAGRAM

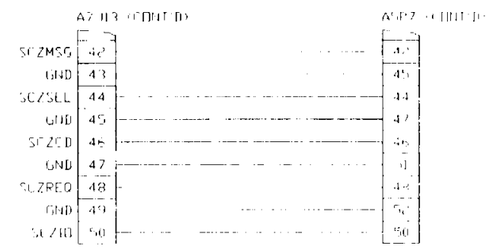

WIRING DIAGRAM

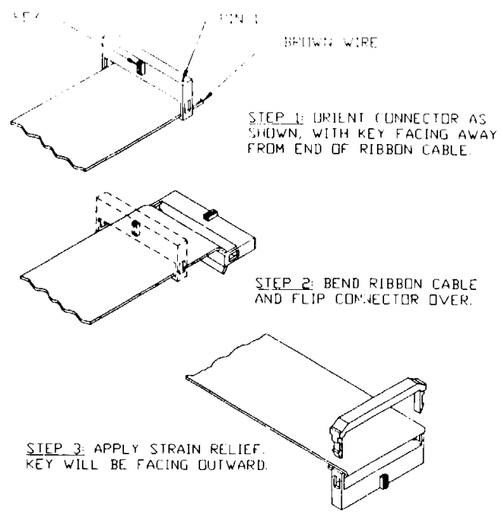

DETAIL "B"

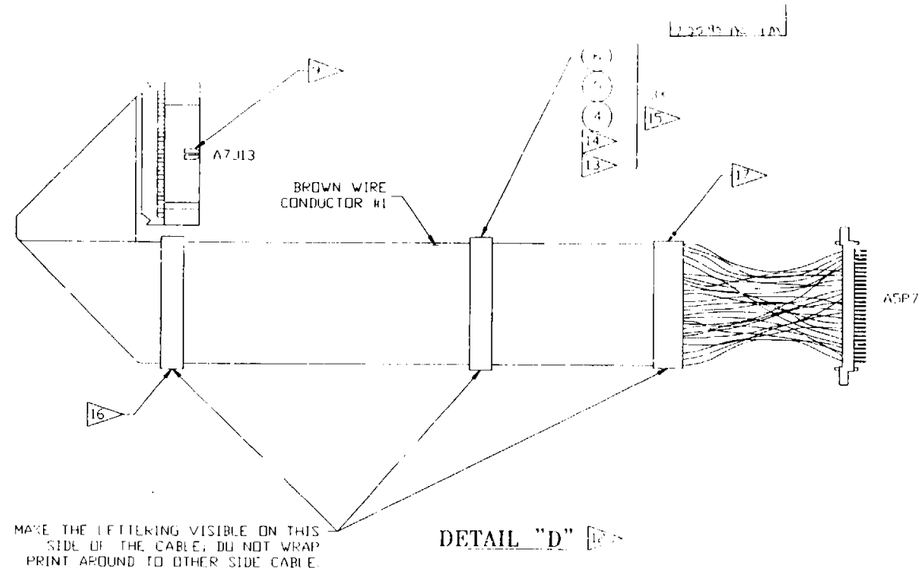

DETAIL "D"

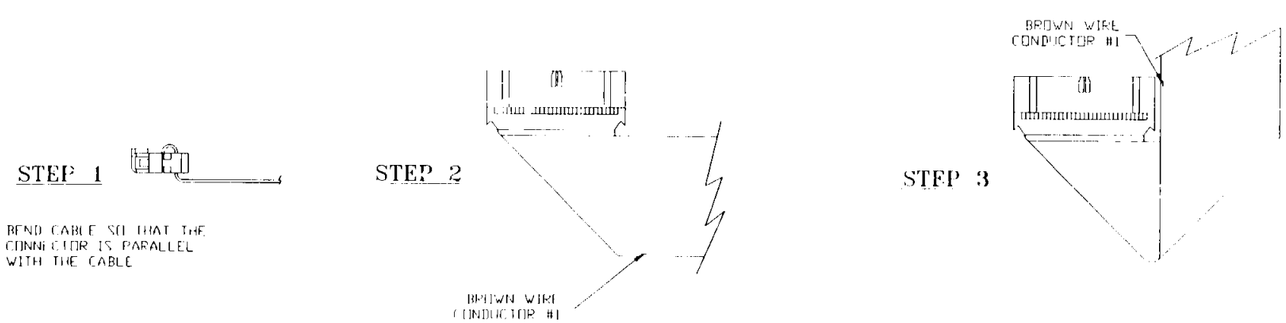

DETAIL "C"

410