LTR	ZONE	REVISION	DATE	EQUIP TYPE	APPROVAL
A	C4	REVISED PIN NUMBERS ON CONNECTORS.	8/14/97 8/14/97 8/14/97		M. SCHLEI R. BULAND B. RUIZ

12-18-97 A PM

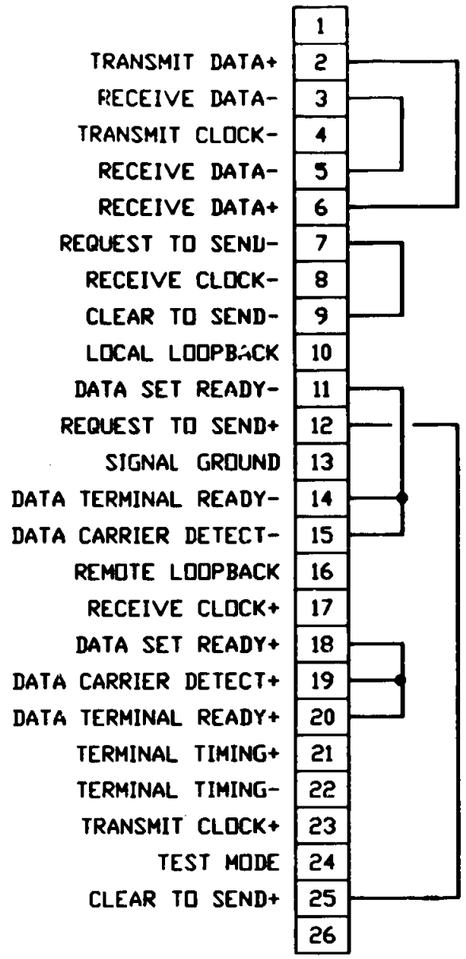

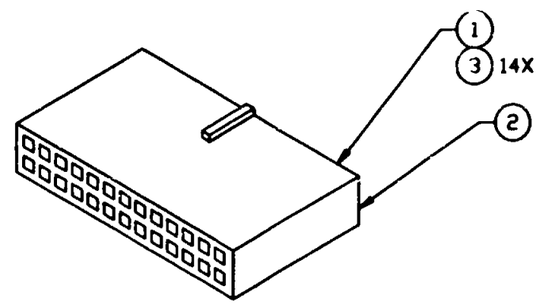

2 ONLY LONG ENOUGH TO MAKE THE CONNECTION

1 AMP INC., HARRISBURG, PA.

NOTES:

5. BAG AND TAG PER JSC-SPEC-M-1, PARA 3.7.9.
4. THIS ASSEMBLY CONTAINS NO FRACTURE CRITICAL COMPONENTS.
3. CLEANLINESS REQUIREMENTS PER SN-C-0005, LEVEL GC.
2. FABRICATE AND TEST IN ACCORDANCE WITH LS-60035.
1. INTERPRET PER JSCM 8500.

NOTES: UNLESS OTHERWISE SPECIFIED,

-701	PART NUMBER	DESCRIPTION	MATERIAL	SPECIFICATION	ITEM
14	1-87756-8	CRIMP SOCKET CONTACTS	CU-SN-PH8Z	1	3
12"	M22759/22-24-9	WIRE STRANDED 24AWG	TFE INSULATED, WHITE	MIL-W-22759	2
1	102387-6	26-POSITION CONNECTOR	THERMOPLASTIC	1	1
-	-701	CONNECTOR, CABLE			

DIMENSIONAL TOLERANCE UNLESS NOTED OTHERWISE .9 ± .1 .000 ± .010 .00 ± .03 ANGULAR ± 0

SURFACE FIN .X IN MICROINCHES RMS UNLESS NOTED OTHERWISE

NEXT ASSY N/A

CALC WT:

MOD FILE:

DRV FILE: G115004.dwg

EQUIP TYPE
☐ FLT HDWR
☐ OTHER (SPECIFY)
☒ APPLICABLE CODE

SIGNATURES	DATE
DR M.SCHLEI	06/11/97
ENG B.A. Ruiz	11/18/97
CH R.A. Buland	11/18/97
APP	12/10/97
QE M. Schlei SQE	12/8/97
MA'L	11/24/97
STRESS	11/19/97
AUTH	12/10/97

NATIONAL AERONAUTICS & SPACE ADMINISTRATION
LYNDON B. JOHNSON SPACE CENTER HOUSTON, TEXAS

CONNECTOR, CABLE
RS422 COM4
LOOPBACK

CODE IDENT NO.	SIZE	DWG NO.	REV
21356	C	SEG38115004	A

SCALE NONE EAS SEG 310 SHEET 1 OF 1

072