LTR	ZONE	REVISION	DATE	EQUIP TYPE	APPROVAL

RELEASED 8/21/97 NC QH

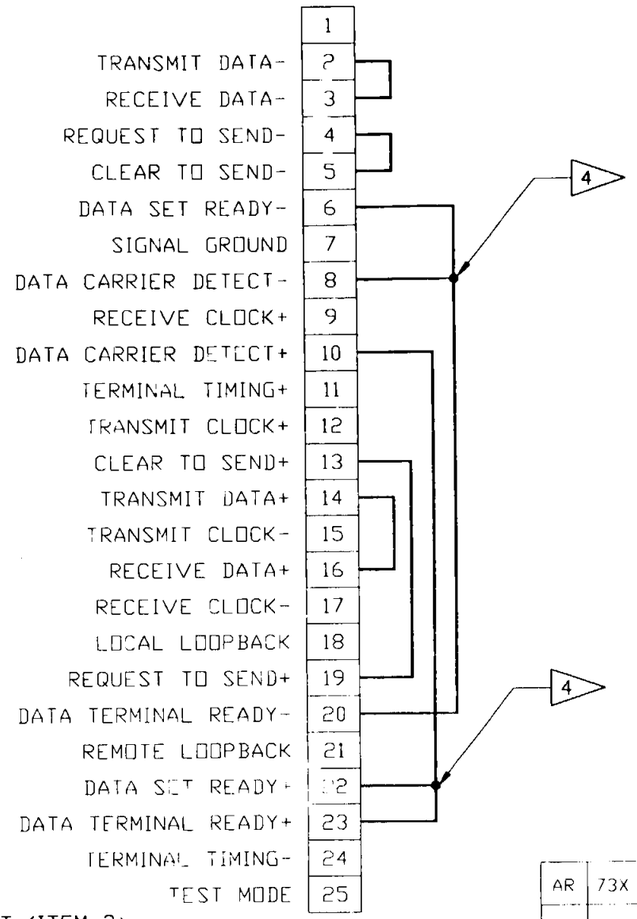

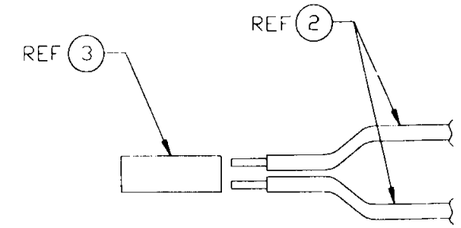

DETAIL A

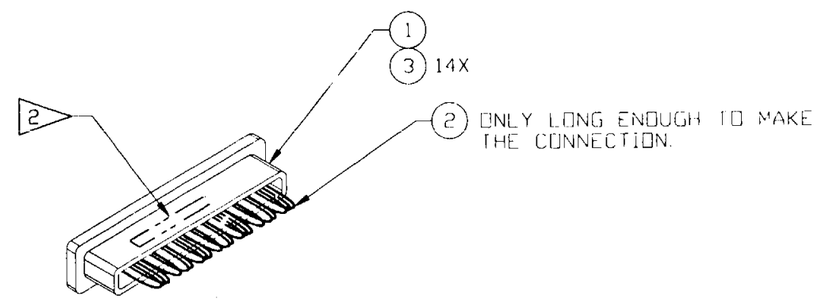

4 INSERT 2 EACH 24 AWG WIRES INTO THE CONTACT (ITEM 3) AND CRIMP AS 20AWG. SEE DETAIL A.

3 INDEPENDENT INK, INC, GARDENA, CA

2 INK STAMP WITH PART NUMBER PER JSC-SPEC M1B PARA 3.7.8 USING ITEM 4.

1 AMP INC., HARRISBURG, PA.

NOTES:

4. THIS ASSEMBLY CONTAINS NO FRACTURE CRITICAL COMPONENTS.
3. CLEANLINESS REQUIREMENTS PER SN-C-0005, LEVEL GC.
2. FABRICATE AND TEST IN ACCORDANCE WITH LS-60035.
1. INTERPRET PER JSCM 8500.

NOTES: UNLESS OTHERWISE SPECIFIED,

-701	PART NUMBER	DESCRIPTION	MATERIAL	SPECIFICATION	ITEM
AR	73X	WHITE INK		3	4
14	M39029/63-368	CRIMP SOCKET CONTACTS		MIL-C 39029	3
12"	M22759/22-24-9	WIRE, STRANDED 24AWG	TFE INSULATED, WHITE	MIL-W-22759	2
1	207463-1	25-PIN FEMALE DSUB	TIN PLATED STEEL THERMOPLASTIC	1	1
-	-701	CONNECTOR, CABLE			

DIMENSIONAL TOLERANCE UNLESS NOTED OTHERWISE
0 ± 1 000 ± 010
00 ± 03 ANGULAR ± 0

SURFACE FINISH IN MICROINCHES RMS - 125 UNLESS NOTED OTHERWISE

NEXT ASSY N/A

EQUIP TYPE
☐ FLT HDWR
☐ OTHER (SPECIFY)
☒ APPLICABLE GSE

SIGNATURES	DATE
DR M.SCHLEI	06/11/97
ENG	7/31/97
CH R.A.	8/4/97
APP	8/6/97
QE	8/11/97
MATL	8/5/97
STRESS	8/5/97
AUTH	8/12/97

NATIONAL AERONAUTICS & SPACE ADMINISTRATION
LYNDON B. JOHNSON SPACE CENTER HOUSTON, TEXAS

CONNECTOR, CABLE, RS422 COM3 LOOPBACK

CODE IDENT NO	SIZE	DWG NO	REV
21356	C	SEG38115003	

SCALE NONE | EAS SEG 310 | SHEET 1 OF 1

CALC WT:
MOD FILE:
DRW FILE: G115003.dwg

6/24/97 NC 1380

289