LTR	ZONE	REVISION	DATE	EQUIP TYPE	APPROVAL

10-2-97 RC fm

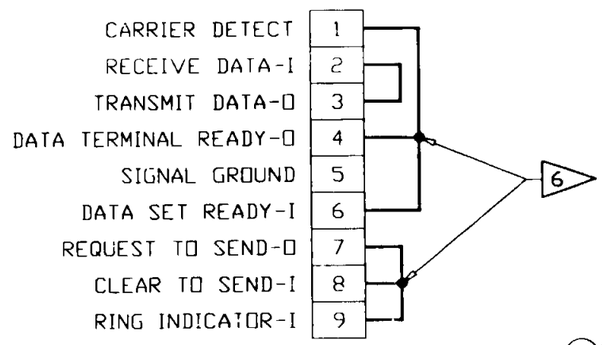

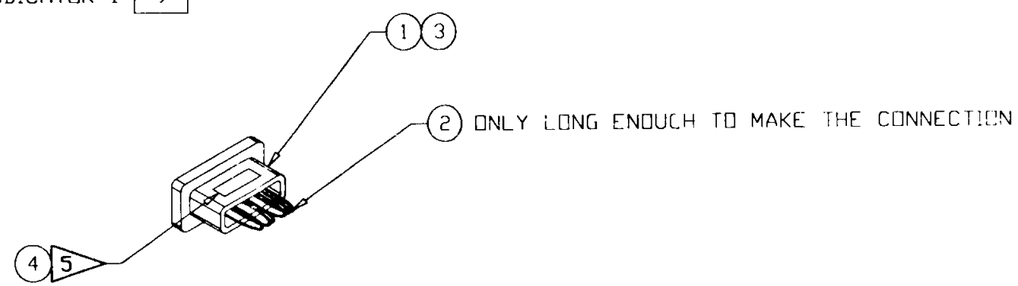

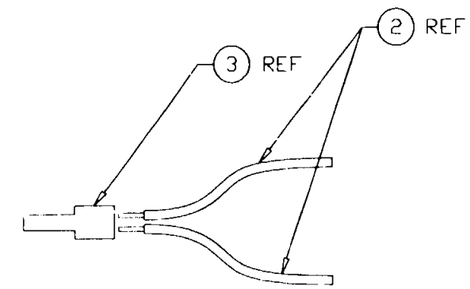

DETAIL A

6 INSERT 2 EACH 24 AWG WIRES INTO THE CONTACT, (ITEM 3) AND CRIMP AS 20 AWG SEE DETAIL A.

5 INK STAMP WITH PART NUMBER USING ITEM 4 PER JSC-SPEC-M1B PARA, 3.7.8.

4 INDEPENDENT INK CO. GARDENA CA.

3 DIGIKEY PART NO. A1031-ND IS EQUIVALENT.

2 3M CO., AUSTIN, TX.

1 AMP INC. HARRISBURG, PA.

NOTES:

6. ALL REFERENCED SPECIFICATIONS AND STANDARDS SHALL BE OF THE LATEST REVISION LEVEL OR AS SPECIFIED IN THE PROCUREMENT DOCUMENT. IN THE CASE OF CONFLICT, THE PROCUREMENT DOCUMENT SHALL TAKE PRECEDENCE.
5. THIS ASSEMBLY CONTAINS NO FRACTURE CRITICAL COMPONENTS.
4. CLEANLINESS REQUIREMENTS PER SN-C-0005, LEVEL GC.
3. FABRICATE AND TEST IN ACCORDANCE WITH LS-60035.
2. BAG AND TAG PER JSC-SPEC-M-1, PARA 3. 7. 9.
1. INTERPRET PER JSCM 8500.

NOTES: UNLESS OTHERWISE SPECIFIED,

-701	PART NUMBER	DESCRIPTION	MATERIAL	SPECIFICATION	ITEM
AR	73X	MARKING, INK, WHITE		4	4
8	M39029/63-368	CONTACT, SOCKET		MIL-C-39029	3
12"	892407-9	WIRE, STRANDED, 24AWG	PVC, WHITE	2	2
1	205203-3	CONNECTOR, FEMALE DB9	TINPLATED STEEL	3 1	1
-	-701	CONNECTOR, CABLE			

DIMENSIONAL TOLERANCE UNLESS NOTED OTHERWISE
0 ± .1 .000 ± .010
.00 ± .03 ANGULAR ± 0
SURFACE FINISH IN MICROINCHES RMS UNLESS NOTED OTHERWISE

NEXT ASSY N/A

EQUIP TYPE
☐ FLT HDWR
☐ OTHER (SPECIFY)
☒ APPLICABLE GSE

SIGNATURES	DATE
DR E. LOOS	06/10/97
ENG B.A. Ruiz	6/22/97
CH R.A. Bullard	9/10/97
APP	10/1/97
QE M. Grace SQE	9/30/97
MAT	9/29/97
STRESS	9/29/97
AUTH	10/8/97

NATIONAL AERONAUTICS & SPACE ADMINISTRATION
LYNDON B. JOHNSON SPACE CENTER HOUSTON, TEXAS

CONNECTOR, CABLE, RS232 COM1 LOOPBACK

CODE IDENT NO	SIZE	DWG NO	REV
21356	C	SEG38115001	

SCALE NONE | EAS SEG 310 | SHEET 1 OF 1

CALC WT:
MOD FILE:
DRW FILE: G115001.dwg

DCN NUMBER			DRAWING CHANGE NOTICE					SHEET 1 OF 1
DRAWING NO. SEG38115001	REV NC	SEQ # 01	REASON FOR CHANGE	ORIGINATOR C. SHANNON	DATE 2/9/98	QE R. SENEGAL	DATE 2/18/98	
DRAWING TITLE CONNECTOR, CABLE, RS232 COM1 LOOPBACK			ADDING FLAG NOTE.	ENG B. RUIZ	2/9/98	MATL F. MONTELEONE	2/17/98	
				CH R. BULAND	2/9/98	STRESS F. YUNG	2/16/98	
PROJECT SEG 310				APP C. CHAMBELLAN	2/17/98			
				AUTH		FINAL APP		

ADD FLAG NOTE 7:

7 M22759/22-24-9 IS AN ACCEPTABLE SUBSTITUTE.

ADD FLAG NOTE 7 TO PARTS LIST
AS SHOWN BELOW:

-701	PART NUMBER	DESCRIPTION	MATERIAL	SPECIFICATION	ITEM	(IS)(WAS)
12"	892407-9	WIRE, STRANDED, 24AWG	PVC, WHITE	7 2	2	

DWG FILE: DCN38115001.dwg PROJECT: J104-HRF-VEG LIBRARY: NON-ASC-DWGS